SUZUKI

GSF600S/GSF600

SERVICE MANUAL

99500-36100-01E

FOREWORD

This manual contains an introductory description on the SUZUKI GSF600S and procedures for its inspection/service and overhaul of its main components.
Other information considered as generally known is not included.
Read the GENERAL INFORMATION section to familiarize yourself with the motorcycle and its maintenance. Use this section as well as other sections to use as a guide for proper inspection and service.
This manual will help you know the motorcycle better so that you can assure your customers of fast and reliable service.

- *This manual has been prepared on the basis of the latest specifications at the time of publication. If modifications have been made since then, differences may exist between the content of this manual and the actual motorcycle.*
- *Illustrations in this manual are used to show the basic principles of operation and work procedures. They may not represent the actual motorcycle exactly in detail.*
- *This manual is written for persons who have enough knowledge, skills and tools, including special tools, for servicing SUZUKI motorcycles. If you do not have the proper knowledge and tools, ask your authorized SUZUKI motorcycle dealer to help you.*

⚠ WARNING

Inexperienced mechanics or mechanics without the proper tools and equipment may not be able to properly perform the services described in this manual. Improper repair may result in injury to the mechanic and may render the motorcycle unsafe for the rider and passenger.

SUZUKI MOTOR CORPORATION
Motorcycle Service Department

© COPYRIGHT SUZUKI MOTOR CORPORATION 1999

GROUP INDEX

GENERAL INFORMATION 1
PERIODIC MAINTENANCE 2
ENGINE 3
FUEL SYSTEM 4
CHASSIS 5
ELECTRICAL SYSTEM 6
SERVICING INFORMATION 7
GSF600 8

HOW TO USE THIS MANUAL

TO LOCATE WHAT YOU ARE LOOKING FOR:

1. The text of this manual is divided into sections.
2. The section titles are listed in the GROUP INDEX.
3. Holding the manual as shown at the right will allow you to find the first page of the section easily.
4. The contents are listed on the first page of each section to help find the item and page you need.

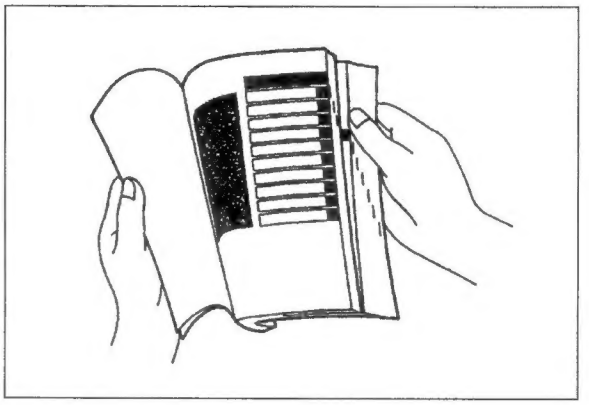

COMPONENT PARTS AND WORK TO BE DONE

Under the name of each system or unit, is its exploded view. Work instructions and other service information such as the tightening torque, lubricating points and locking agent points, are provided.

Example: Front wheel

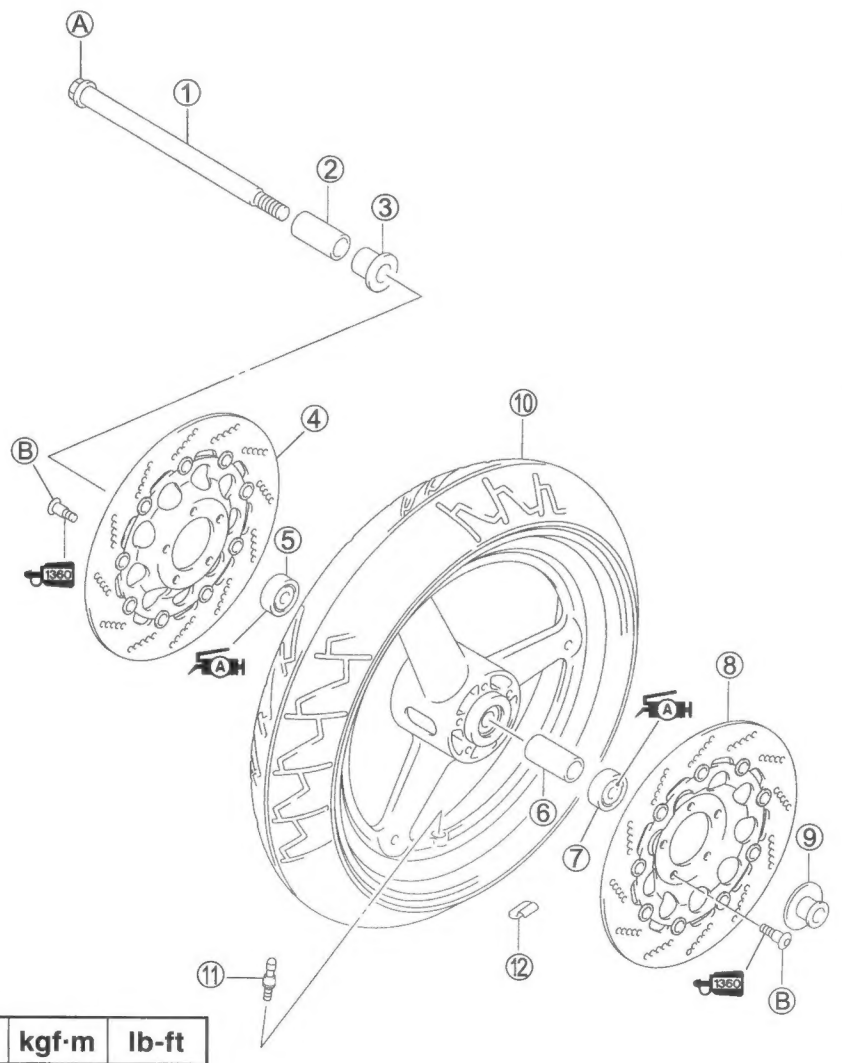

① Front axle
② Spacer
③ Collar
④ Brake disc (R)
⑤ Bearing (R)
⑥ Spacer
⑦ Bearing (L)
⑧ Brake disc (L)
⑨ Collar
⑩ Front wheel
⑪ Air valve
⑫ Balancer

Ⓐ Axle shaft
Ⓑ Brake disc bolt

ITEM	N·m	kgf·m	lb-ft
Ⓐ	65	6.5	47.0
Ⓑ	23	2.3	16.5

SYMBOL

Listed in the table below are the symbols indicating instructions and other information necessary for servicing. The meaning of each symbol is also included in the table.

SYMBOL	DEFINITION	SYMBOL	DEFINITION
	Torque control required. Data beside it indicates specified torque.		Apply THREAD LOCK SUPER "1360". 99000-32130
	Apply oil. Use engine oil unless otherwise specified.		Apply or use brake fluid.
	Apply molybdenum oil solution (mixture of engine oil and SUZUKI MOLY PASTE in a ratio of 1:1).		Measure in voltage range.
	Apply SUZUKI SUPER GREASE "A". 99000-25010		Measure in resistance range.
	Apply SUZUKI SILICONE GREASE. 99000-25100		Measure in current range.
	Apply SUZUKI MOLY PASTE. 99000-25140		Measure in diode test range.
	Apply THERMO-GREASE. 99000-59029		Measure in continuity test range.
	Apply SUZUKI BOND "1207B". 99000-31140		Use special tool.
	Apply THREAD LOCK SUPER "1303". 99000-32030		Use fork oil. 99000-99044-10G
	Apply THREAD LOCK "1342". 99000-32050		Indication of service data.

GENERAL INFORMATION

1

CONTENTS

WARNING/CAUTION/NOTE 1- 2
GENERAL PRECAUTIONS 1- 2
SUZUKI GSF600SY (2000-MODEL) 1- 4
SERIAL NUMBER LOCATION 1- 4
FUEL AND OIL RECOMMENDATION 1- 4
FUEL 1- 4
ENGINE OIL 1- 5
BRAKE FLUID 1- 5
FRONT FORK OIL 1- 5
BREAK-IN PROCEDURES 1- 5
CYLINDER IDENTIFICATION 1- 5
INFORMATION LABELS 1- 6
SPECIFICATIONS 1- 7
COUNTRY OR AREA CODES 1- 9

WARNING/CAUTION/NOTE

Please read this manual and follow its instructions carefully. To emphasize special information, the symbol and the words WARNING, CAUTION and NOTE have special meanings. Pay special attention to the messages highlighted by these signal words.

⚠ WARNING

Indicates a potential hazard that could result in death or injury.

⚠ CAUTION

Indicates a potential hazard that could result in motorcycle damage.

NOTE:
Indicates special information to make maintenance easier or instructions clearer.

Please note, however, that the warnings and cautions contained in this manual cannot possibly cover all potential hazards relating to the servicing, or lack of servicing, of the motorcycle. In addition to the WARNINGS and CAUTIONS stated, you must use good judgement and basic mechanical safety principles. If you are unsure about how to perform a particular service operation, ask a more experienced mechanic for advice.

GENERAL PRECAUTIONS

⚠ WARNING

- **Proper service and repair procedures are important for the safety of the service mechanic and the safety and reliability of the motorcycle.**
- **When 2 or more persons work together, pay attention to the safety of each other.**
- **When it is necessary to run the engine indoors, make sure that exhaust gas is forced outdoors.**
- **When working with toxic or flammable materials, make sure that the area you work in is well-ventilated and that you follow all of the material manufacturer's instructions.**
- **Never use gasoline as a cleaning solvent.**
- **To avoid getting burned, do not touch the engine, engine oil, oil cooler and exhaust system until they have cooled.**
- **After servicing the fuel, oil, exhaust or brake systems, check all lines and fittings related to the system for leaks.**

⚠ CAUTION

* If parts replacement is necessary, replace the parts with Suzuki Genuine Parts or their equivalent.
* When removing parts that are to be reused, keep them arranged in an orderly manner so that they may be reinstalled in the proper order and orientation.
* Be sure to use special tools when instructed.
* Make sure that all parts used in reassembly are clean. Lubricate them when specified.
* Use the specified lubricant, bond, or sealant.
* When removing the battery, disconnect the negative cable first and then the positive cable. When reconnecting the battery, connect the positive cable first and then the negative cable, and replace the terminal cover on the positive terminal.
* When performing service to electrical parts, if the service procedures not require use of battery power, disconnect the negative cable the battery.
* When tightening the cylinder head and case bolts and nuts, tighten the larger sizes first. Always tighten the bolts and nuts diagonally from the inside working out and to the specified tightening torque.
* Whenever you remove oil seals, gaskets, packing, O-rings, locking washers, self-locking nuts, cotter pins, circlips and certain other parts as specified, be sure to replace them with new ones. Also, before installing these new parts, be sure to remove any left over material from the mating surfaces.
* Never reuse a circlip. When installing a new circlip, take care not to expand the end gap larger than required to slip the circlip over the shaft. After installing a circlip, always ensure that it is completely seated in its groove and securely fitted.
* Use a torque wrench to tighten fasteners to the specified torque. Wipe off grease and oil if a thread is smeared with them.
* After reassembling, check parts for tightness and proper operation.

* To protect the environment, do not unlawfully dispose of used motor oil and other fluids: batteries, and tires.
* To protect Earth's natural resources, properly dispose of used motorcycle and parts.

SUZUKI GSF600SY (2000-MODEL)

LEFT

RIGHT

* Difference between photograph and actual motorcycle depends on the markets.

SERIAL NUMBER LOCATION

The frame serial number or V.I.N. (Vehicle Identification Number) ① is stamped on the right side of the steering head pipe. The engine serial number ② is located on the right side of the crankcase. These numbers are required especially for registering the machine and ordering spare parts.

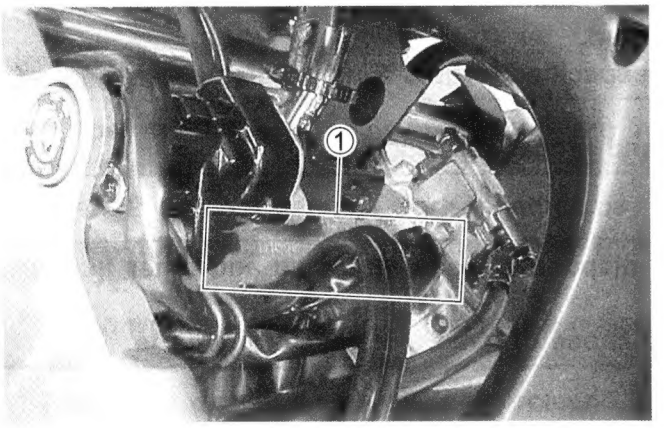

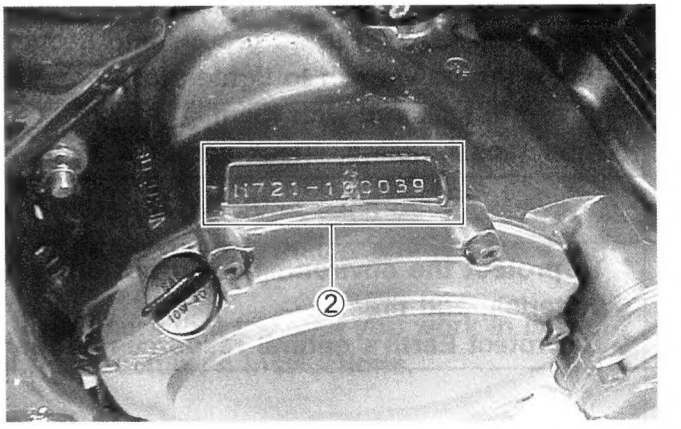

FUEL AND OIL RECOMMENDATION

FUEL (For Canada)

1. Use only unleaded gasoline of at least 87 pump octane ($\frac{R+M}{2}$) method or 91 octane or higher rated by the research method.
2. Suzuki recommends that customers use alcohol free, unleaded gasoline whenever possible.
3. Use of blended gasoline containing MTBE (Methyl Tertiary Butyl Ether) is permitted.
4. Use of blended gasoline/alcohol fuel is permitted, provided that the fuel contains not more than 10% ethanol. Gasoline/alcohol fuel may contain up to 5% methanol if appropriate cosolvents and corrosion inhibitors are present in it.
5. If the performance of the vehicle is unsatisfactory while using blended gasoline/alcohol fuel, you should switch to alcohol-free unleaded gasoline.
6. Failure to follow these guideline could possibly void applicable warranty coverage. Check with your fuel supplier to make sure that the fuel you intend to use meets the requirements listed above.

FUEL (For the others)

Gasoline used should be graded 91 octane (Research Method) or higher. An unleaded gasoline is recommended.

ENGINE OIL

Use a premium quality 4-stroke motor oil to ensure longer service life of your motorcycle. Use only oils which are rated SF or SG under the API service classification.
The recommended viscosity is SAE 10W-40. If an SAE 10W-40 motor oil is not available, select an alternative according to the right chart.

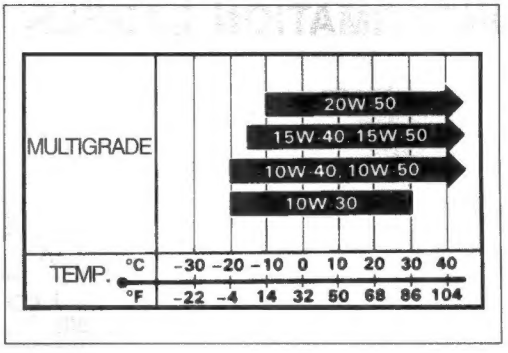

BRAKE FLUID

Specification and classification: DOT 4

⚠ WARNING

Since the brake system of this motorcycle is filled with a glycol-based brake fluid by the manufacturer, do not use or mix different types of fluid such as silicone-based and petroleum-based fluid for refilling the system, otherwise serious damage will result.
Do not use any brake fluid taken from old or used or unsealed containers.
Never re-use brake fluid left over from a previous servicing, which has been stored for a long period.

FRONT FORK OIL

Use fork oil #10 or equivalent fork oil.

BREAK-IN PROCEDURES

During manufacture only the best possible materials are used and all machined parts are finished to a very high standard but it is still necessary to allow the moving parts to "BREAK-IN" before subjecting the engine to maximum stresses. The future performance and reliability of the engine depends on the care and restraint exercised during its early life. The general rules are as follows.

- Keep to these break-in engine speed limits:

Initial 800 km (500 miles): Below 6 000 r/min.
Up to 1 600 km (1 000 miles): Below 9 000 r/min.
Over 1 600 km (1 000 miles): Below 12 000 r/min.

- Upon reaching an odometer reading of 1 600 km (1 000 miles) you can subject the motorcycle to full throttle operation. However, do not exceed 12 000 r/min. at any time.

CYLINDER IDENTIFICATION

The four cylinders of this engine are identified as No.1, No.2, No.3 and No.4 cylinder, as counted from left to right (as viewed by the rider on the seat).

INFORMATION LABELS

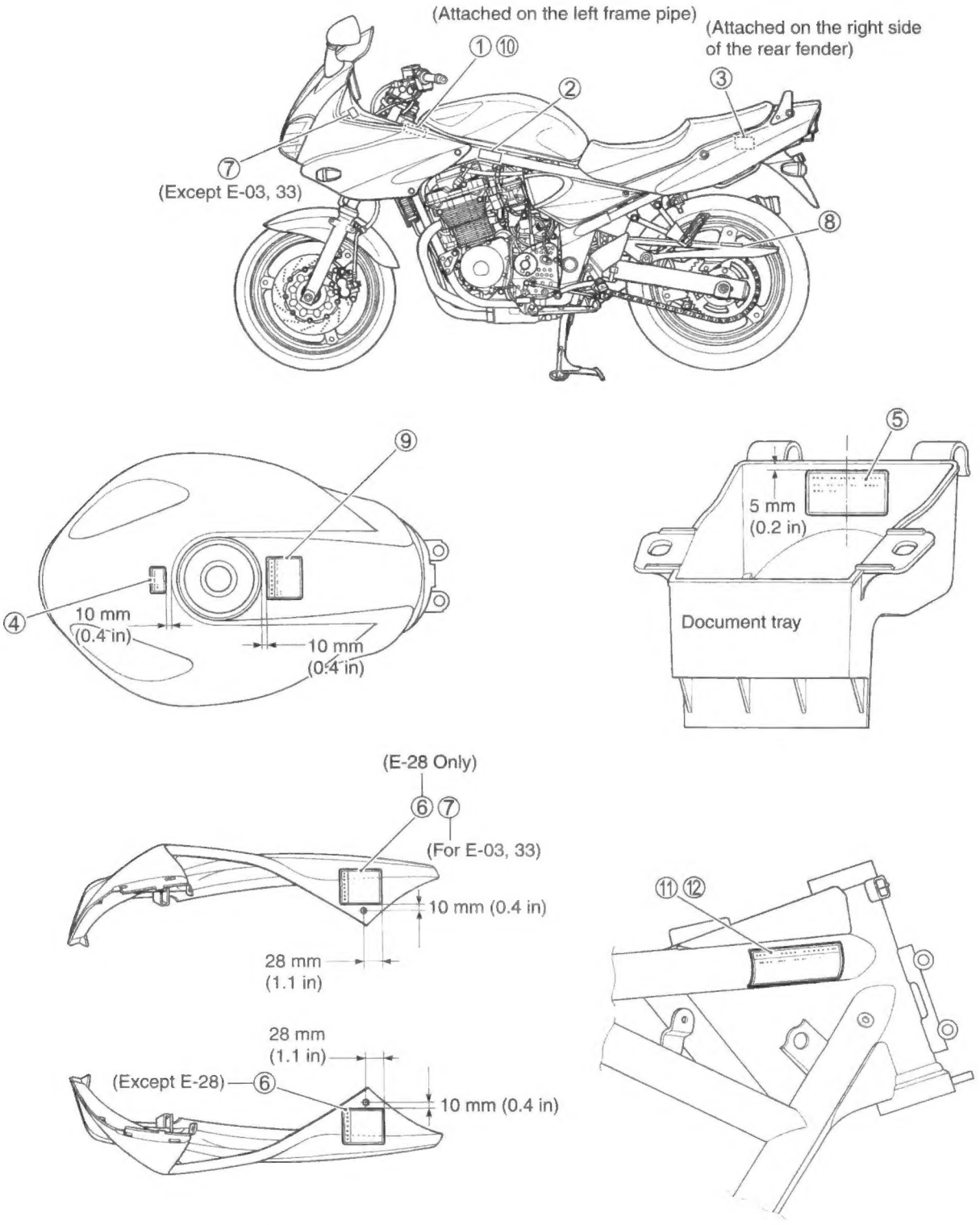

①	Noise label (For E-03, 33)	⑦	Warning steering label
②	Information label (For E-03, 28, 33)	⑧	Tire pressure label
③	Vacuum hose routing label (For E-33)	⑨	Warning safety label
④	Fuel caution label (For E-02, 24)	⑩	ICES Canada label (For E-28)
⑤	Manual notice label (For E-03, 33)	⑪	ID plate (Except E-03, 28, 33)
⑥	Warning screen label	⑫	Safety plate (For E-03, 28, 33)

SPECIFICATIONS

DIMENSIONS AND DRY MASS

Overall length	2 060 mm (81.1 in)
Overall width	770 mm (30.3 in)
Overall height	1 220 mm (48.0 in)
Wheelbase	1 440 mm (56.7 in)
Ground clearance	130 mm (5.1 in)
Seat height	790 mm (31.1 in)
Dry mass	208 kg (458 lbs)

ENGINE

Type	Four-stroke, air-cooled, with SACS, DOHC, TSCC
Number of cylinders	4
Bore	62.6 mm (2.465 in)
Stroke	48.7 mm (1.917 in)
Compression ratio	11.3 : 1
Piston diplacement	600 cm^3 (36.6 cu.in)
Carburetor	KEIHIN CVR32SS, four
Air cleaner	Non-woven fabric element
Starter system	Electric starter
Lubrication system	Wet sump

TRANSMISSION

Clutch	Wet multi-plate type
Transmission	6-speed constant mesh
Gearshift pattern	1-down, 5-up
Primary reduction ratio	1.744 (75/43)
Final reduction ratio	3.133 (47/15)
Gear ratios, Low	3.083 (37/12)
2nd	2.062 (33/16)
3rd	1.647 (28/17)
4th	1.400 (28/20)
5th	1.227 (27/22)
Top	1.095 (23/21)
Drive chain	RK50MFOZ1, 112 links

CHASSIS

Front suspension	Telescopic, coil spring, oil damped
Rear suspension	Link type, gas/oil damped, coil spring, spring preload 7-way adjustable, rebound damping force 4-way adjustable
Steering angle	35° (right & left)
Caster	25°
Trail	98 mm (3.9 in)
Turning radius	2.8 m (9.2 ft)
Front brake	Disc brake, twin
Rear brake	Disc brake
Front tire size	120/60 ZR17 (55W), tubeless
Rear tire size	160/60 ZR17 (69W), tubeless
Front fork stroke	130 mm (5.1 in)
Rear wheel travel	126 mm (5.0 in)

ELECTRICAL

Ignition type	Electronic ignition (Fully Transistorized)
Ignition timing	4° B.T.D.C. at 1 200 r/min. ..... E-28 13° B.T.D.C. at 1 500 r/min. .... Others
Spark plug	NGK CR9EK or DENSO U27ETR
Battery	12 V 28.8 kC (8 Ah)/10HR
Generator	Three-phase A.C. Generator
Main fuse	30 A
Fuse	15/15/15/10/10 A
Headlight	12 V 60 + 51/51 W
Position light	12 V 5 W ..... Except for E-24, -28
Turn signal light	12 V 21 W × 4
Brake light/Taillight	12 V 21/5 W × 2
License light	5 W
Speedometer light	LED
Tachometer light	LED
Neutral indicator light	LED
High beam indicator light	LED
Turn signal indicator light	LED
Oil pressure indicator light	LED

CAPACITIES

Fuel tank, including reserve	20.0 L (5.2/4.4 US/Imp gal)
reserve	4.5 L (1.2/1.0 US/Imp gal)
Engine oil, oil change	3 300 ml (3.5/2.9 US/Imp qt)
with filter change	3 500 ml (3.7/3.1 US/Imp qt)
overhaul	4 600 ml (4.9/4.0 US/Imp qt)
Front fork oil (each leg)	506 ml (17.1/17.8 US/Imp oz) ..... E-28 510 ml (17.2/18.0 US/Imp oz) ..... Others

These specifications are subject to change without notice.

COUNTRY OR AREA CODES

The following codes stand for the applicable country(-ies) and area(-s).

CODE	COUNTRY or AREA
E-02	England (UK)
E-19	European markets
E-24	Australia
E-28	Canada

PERIODIC MAINTENANCE

CONTENTS

PERIODIC MAINTENANCE SCHEDULE 2- 2
- PERIODIC MAINTENANCE CHART 2- 2
- LUBRICATION POINTS 2- 3

MAINTENANCE AND TUNE-UP PROCEDURES 2- 4
- VALVE CLEARANCE 2- 4
- SPARK PLUGS 2- 5
- EXHAUST PIPE BOLTS AND MUFFLER BOLTS 2- 7
- AIR CLEANER 2- 7
- ENGINE OIL AND OIL FILTER 2- 9
- FUEL HOSE 2-10
- FUEL FILTER 2-11
- ENGINE IDLE SPEED 2-11
- THROTTLE CABLE PLAY 2-11
- CARBURETOR SYNCHRONIZATION 2-12
- EVAPORATIVE EMISSION CONTROL SYSTEM (E-33 ONLY) 2-12
- PAIR (AIR SUPPLY) SYSTEM 2-13
- CLUTCH CABLE PLAY 2-13
- DRIVE CHAIN 2-14
- BRAKES 2-16
- TIRES 2-19
- STEERING 2-20
- FRONT FORK 2-21
- REAR SUSPENSION 2-21
- CHASSIS BOLTS AND NUTS 2-22

COMPRESSION PRESSURE CHECK 2-24

OIL PRESSURE CHECK 2-25

PERIODIC MAINTENANCE SCHEDULE

The chart below lists the recommended intervals for all the required periodic service work necessary to keep the motorcycle operating at peak performance and economy. Maintenance intervals are expressed in terms of kilometers, miles and months, and are dependant on whichever comes first.

NOTES:

More frequent servicing may be performed on motorcycles that are used under severe conditions.

PERIODIC MAINTENANCE CHART

Item \ Interval	km	1 000	6 000	12 000	18 000	24 000
	miles	600	4 000	7 500	11 000	15 000
	months	1	6	12	18	24
Valve clearance		I	–	I	–	I
Spark plugs		–	I	R	I	R
Exhaust pipe bolts and muffler bolts		T	–	T	–	T
Air cleaner		–	I	I	R	I
Engine oil		R	R	R	R	R
Engine oil filter		R	–	–	R	–
Fuel hose		–	I	I	I	I
		Replace every four years.				
Fuel filter		–	I	R	I	R
Engine idle speed		I	I	I	I	I
Throttle cable play		I	I	I	I	I
Carburetor synchronization		I (E-33 only)	–	I	–	I
Evaporative emission control system		–	–	I	–	I
(E-33 only)		Replace vapor hose every four years.				
PAIR (air supply) system		–	–	I	–	I
Clutch cable play		–	I	I	I	I
Drive chain		I	I	I	I	I
		Clean and lubricate every 1 000 km (600 miles).				
Brakes		I	I	I	I	I
Brake hoses		–	I	I	I	I
		Replace every four years.				
Brake fluid		–	I	I	I	I
		Replace every two years.				
Tires		–	I	I	I	I
Steering		I	–	I	–	I
Front forks		–	–	I	–	I
Rear suspension		–	–	I	–	I
Chassis bolts and nuts		T	T	T	T	T

I = Inspect and adjust, clean, lubricate or replace as necessary.

R = Replace

T = Tighten

LUBRICATION POINTS

Proper lubrication is important for smooth operation and long life of each working part of the motorcycle. Major lubrication points are indicated below.

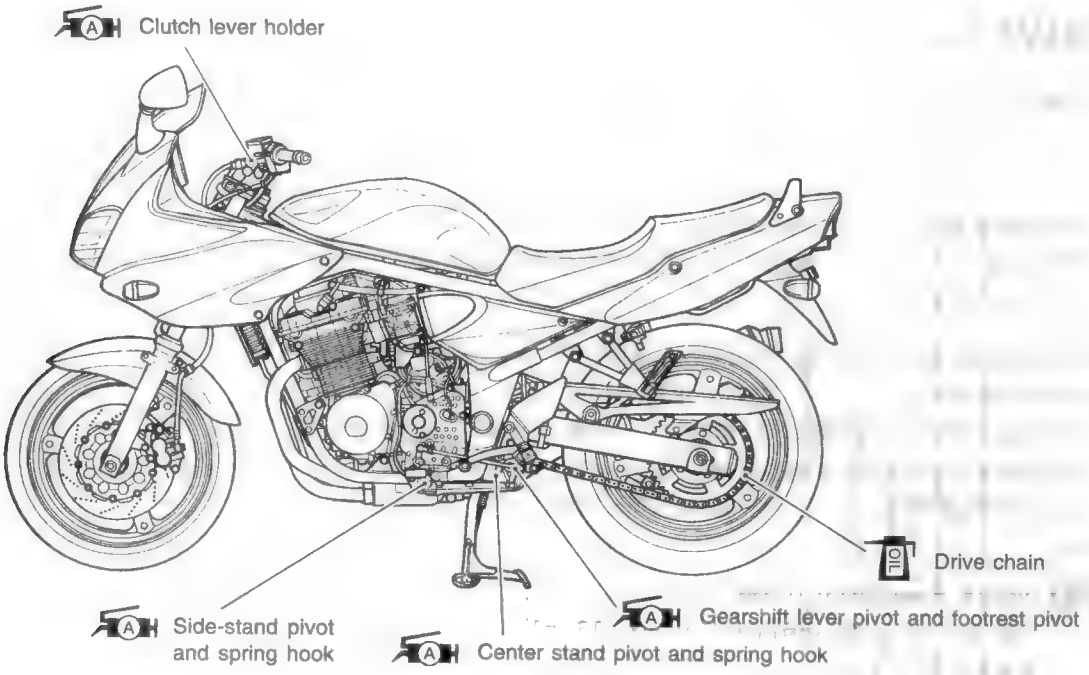

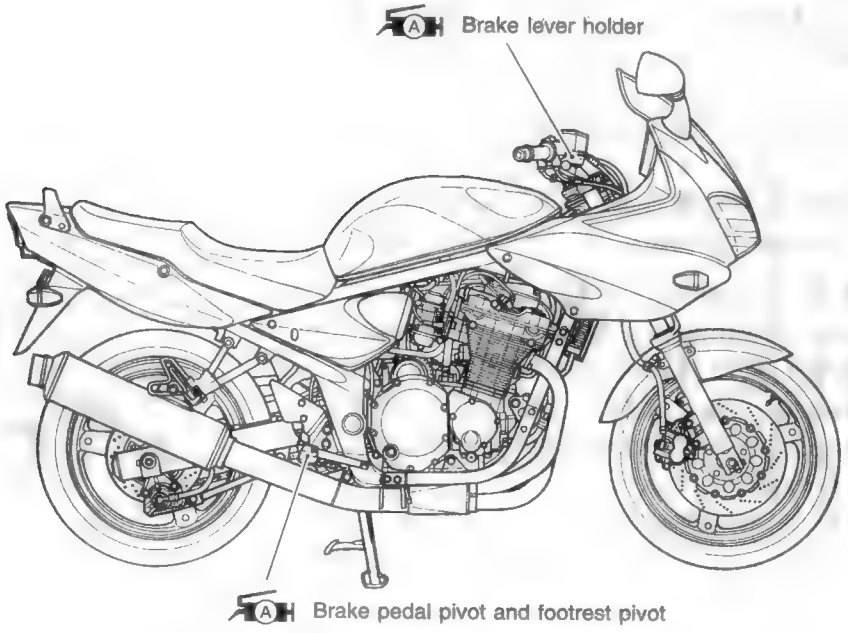

NOTE:

- *Before lubricating each part, clean off any rusty spots and wipe off any grease, oil, dirt or grime.*
- *Lubricate exposed parts which are subject to rust, with a rust preventative spray, especially whenever the motorcycle has been operated under wet or rainy conditions.*

MAINTENANCE AND TUNE-UP PROCEDURES

This section describes the servicing procedures for each item mentioned in the Periodic Maintenance chart.

VALVE CLEARANCE

Inspect initially at 1 000 km (600 miles, 1 month) and every 12 000 km (7 500 miles, 12 months).

- Remove the seat and fuel tank. (☞4-3)
- Remove all of the spark plugs.
- Remove the cylinder head cover and signal generator cover. (☞3-12 and -13)

The valve clearance specification is different for both intake and exhaust valves.
Valve clearance adjustment must be checked and adjusted 1) at the time of periodic inspection, 2) when the valve mechanism is serviced, and 3) when the camshafts are removed for servicing.

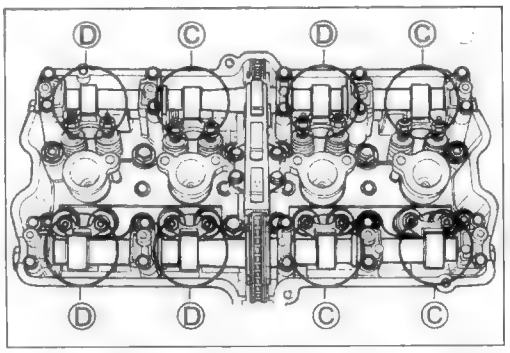

DATA **Valve clearance (when cold):**
IN.: 0.10 – 0.15 mm (0.004 – 0.006 in)
EX.: 0.18 – 0.23 mm (0.007 – 0.009 in)

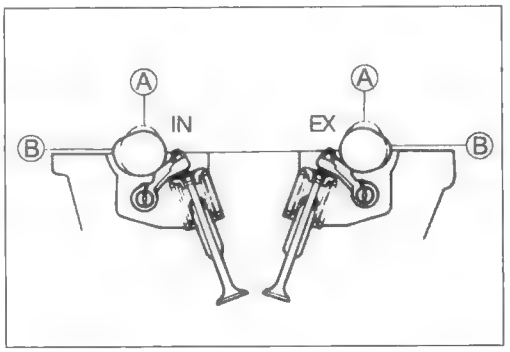

NOTE:

* *The camshafts must be at positions Ⓐ or Ⓑ, in order to check or adjust the valve clearance. Clearance readings should not be taken with the camshafts in any other position than the ones shown.*

* *The valve clearance should only be checked when the engine is cold.*

* *Turn the crankshaft clockwise using a 19-mm wrench. Make sure that all of the spark plugs have been removed.*

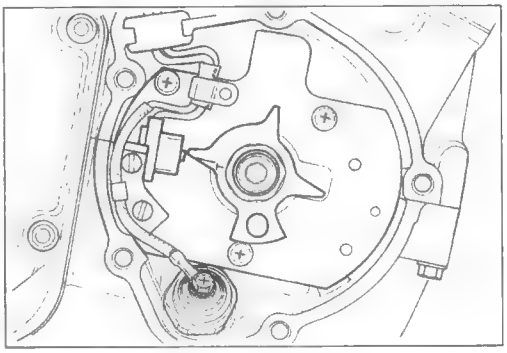

- Turn the crankshaft clockwise and align the "T" mark on the signal generator rotor with the center of the pickup coil. Also, position the notches ① on the right end of each camshaft as shown. Then, measure the following valve clearances Ⓒ:
  Cylinder #1: intake and exhaust valve clearances
  Cylinder #2: exhaust valve clearance
  Cylinder #3: intake valve clearance

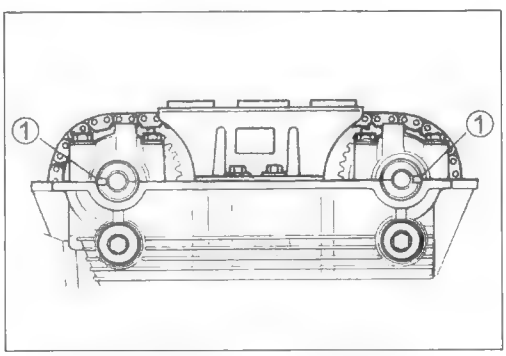

- Insert a thickness gauge between the end of the valve stem and the adjusting screw on the rocker arm. If the clearance is out of specification, hold the locknut with a wrench and use the special tool to adjust the clearance.

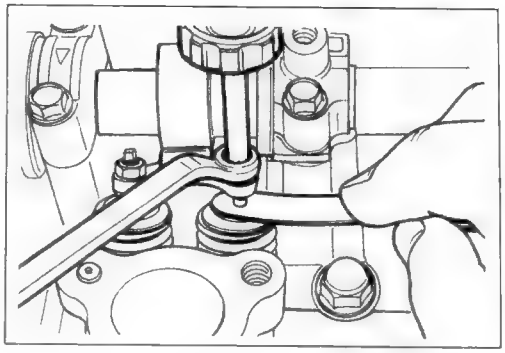

TOOL 09900-20803: Thickness gauge
09917-14910: Valve adjuster driver

⚠ CAUTION

Both the right and left valve clearances should be as closely as possible.

- Turn the crankshaft clockwise 360° (one full rotation) and align the "T" mark on the signal generator rotor with the center of the pickup coil. Also, position the notches ① on the right end of each camshaft as shown.
- Measure the valve clearances of the remaining valves Ⓓ and adjust them if necessary.

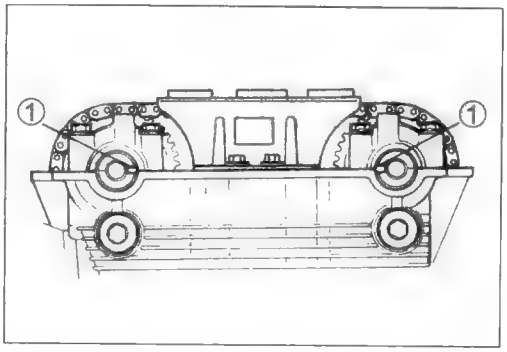

Camshaft position	Notch ① position	
	Intake camshaft	Exhaust camshaft
Ⓒ	⊖	⊕
Ⓓ	⊕	⊖

- When installing the cylinder head cover, apply the recommended bond to the cylinder head cover groove and camshaft end caps. (☞3-47)

1207B 99000-31140: SUZUKI BOND "1207B"

- Tighten the cylinder head cover bolts to the specified torque.

Cylinder head cover bolt: 14 N·m (1.4 kgf·m, 10.0 lb-ft)

- Install the signal generator cover. (☞3-46)

SPARK PLUGS

Inspect every 6 000 km (4 000 miles, 6 months) and replace every 12 000 km (7 500 miles, 12 months).

- Remove all of the spark plugs.

NOTE:
If it is difficult to remove any of the spark plug caps, pry them up using a screwdriver.

TOOL 09930-10121: Spark plug wrench set
09900-20803: Thickness gauge

	Standard	Cold type	Hot type
NGK	CR9EK	CR10EK	CR8EK
DENSO	U27ETR	U31ETR	U24ETR

CARBON DEPOSITS

Check to see if there are carbon deposits on the spark plug.
If carbon is deposited, remove it using a spark plug cleaner machine or carefully use a tool with a pointed end.

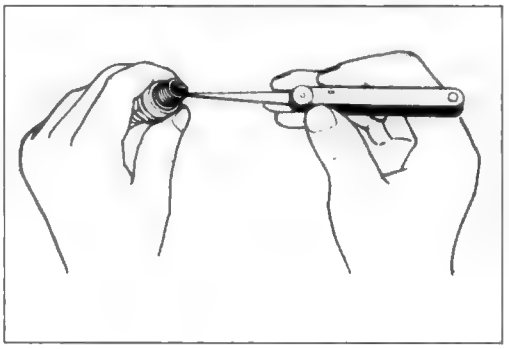

SPARK PLUG GAP

Measure the spark plug gap using a thickness gauge.
If out of specification, regap the spark plug.

DATA Spark plug gap: 0.6 – 0.7 mm (0.024 – 0.028 in)

TOOL 09900-20803: Thickness gauge

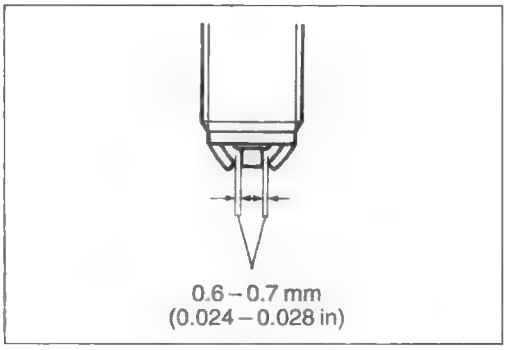

ELECTRODE'S CONDITION

Check the condition of the electrode.
If it is extremely worn or burnt, replace the spark plug.
Replace the spark plug if it has a broken insulator, damaged threads, etc.

⚠ CAUTION

Check the thread size and reach when replacing the spark plug. If the reach is too short, carbon will be deposited on the screw portion of the spark plug hole and engine damage may result.

SPARK PLUG INSTALLATION

⚠ CAUTION

To avoid damaging the cylinder head threads, first finger tighten the spark plug and then tighten it to the proper torque using the spark plug wrench.

- Insert the spark plugs to the cylinder heads by finger tight, and then tighten them to the specified torque.

Spark plug: 11 N·m (1.1 kgf·m, 8.0 lb-ft)

EXHAUST PIPE BOLTS AND MUFFLER BOLTS

Tighten initially at 1 000 km (600 miles, 1 month) and every 12 000 km (7 500 miles, 12 months) thereafter.

- Tighten the exhaust pipe bolts and muffler mounting bolts to the specified torque.

Exhaust pipe bolt: 23 N·m (2.3 kgf·m, 16.5 lb-ft)
Muffler mounting bolt: 29 N·m (2.9 kgf·m, 21.0 lb-ft)

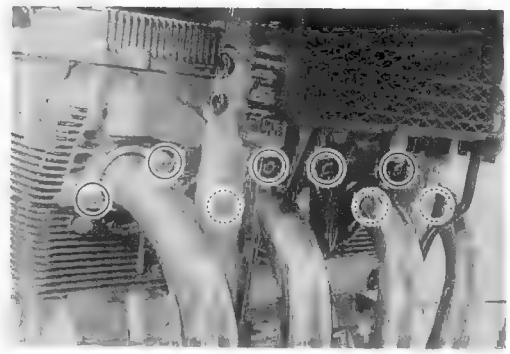

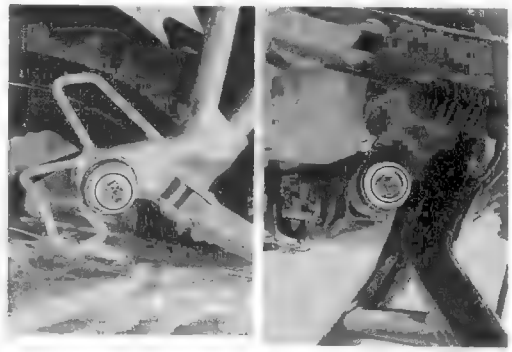

AIR CLEANER

Inspect every 6 000 km (4 000 miles, 6 months) and replace every 18 000 km (11 000 miles, 18 months).

- Remove the seat and fuel tank. (☞4-3)
- Remove the fuel tank mounting bracket ①.
- Remove the air cleaner element cover ②.

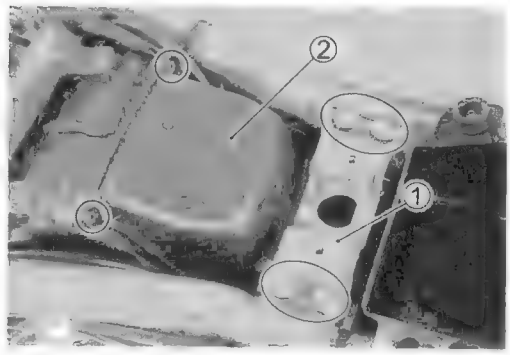

- Remove the air cleaner element ③.

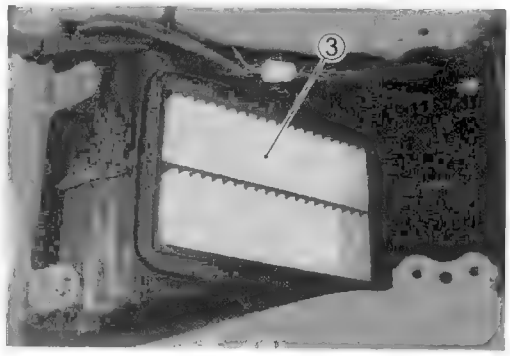

- Carefully use compressed air to clean the air cleaner element.

⚠ CAUTION

Always apply compressed air to the inside of the air cleaner element. If compressed air is applied to the outside, dirt will be forced into the pores of the air cleaner element, restricting air flow through the air cleaner element.

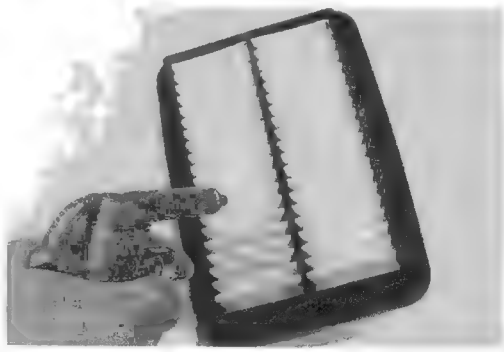

- Reinstall the cleaned or new air cleaner element in the reverse order of removal.

- When installing the air cleaner element into the air cleaner case, make sure that the ◆ mark Ⓐ points up.

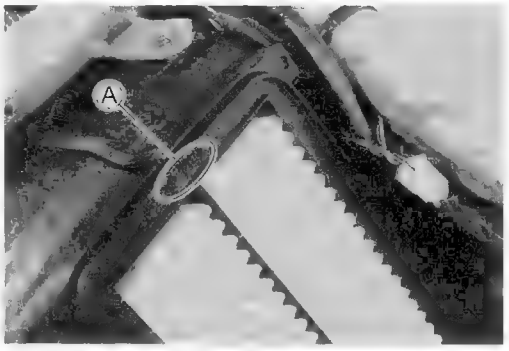

⚠ CAUTION

If driving under dusty conditions, clean the air cleaner element more frequently. The surest way to accelerate engine wear is to operate the engine without the element or to use a torn element. Make sure that the air cleaner is in good condition at all times. Life of the engine depends largely on this component!

- Remove the drain plug from the air cleaner drain hose to allow any water to drain out.

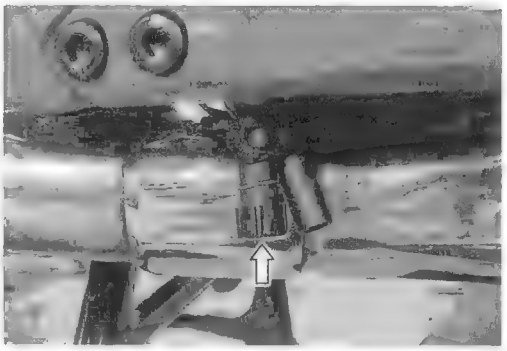

ENGINE OIL AND OIL FILTER

(ENGINE OIL)
Replace initially at 1 000 km (600 miles, 1 month) and every 6 000 km (4 000 miles, 6 months) thereafter.

(OIL FILTER)
Replace initially at 1 000 km (600 miles, 1 month) and every 18 000 km (11 000 miles, 18 months) thereafter.

The oil should be changed while the engine is warm. Oil filter replacement at the above intervals, should be done together with the engine oil change.

ENGINE OIL REPLACEMENT

- Keep the motorcycle upright.
- Place an oil pan below the engine, and drain the oil by removing the oil drain plug ① and filler cap ②.

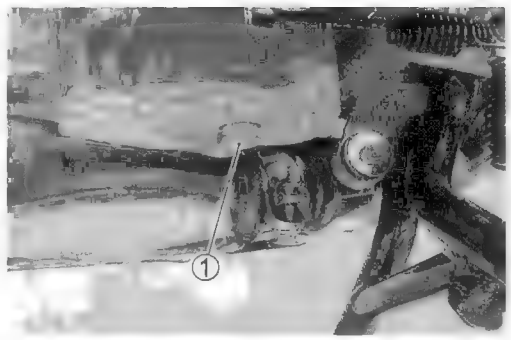

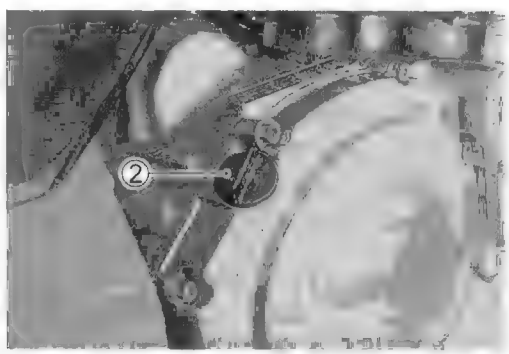

- Tighten the oil drain plug ③ to the specified torque, and pour new oil through the oil filler. When performing an oil change (without oil filter replacement), the engine will hold about 3.3 L (3.5/2.9 US/Imp qt) of oil. Use SF or SG classified (API) engine oil with a viscosity rating of 10W/40 (SAE).

Oil drain plug: 23 N·m (2.3 kgf·m, 16.5 lb-ft)

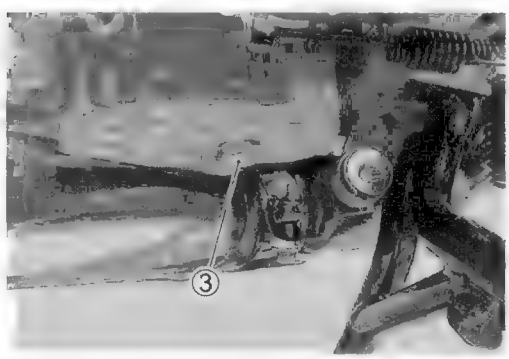

- Start up the engine and allow it to run for several minutes at idling speed.
- Turn off the engine and wait about three minutes, then check the oil level through the inspection window ④. If the level is below the "L" mark, add oil to the "F" mark. If the level is above the "F" mark, drain the oil until the level reaches the "F" mark.

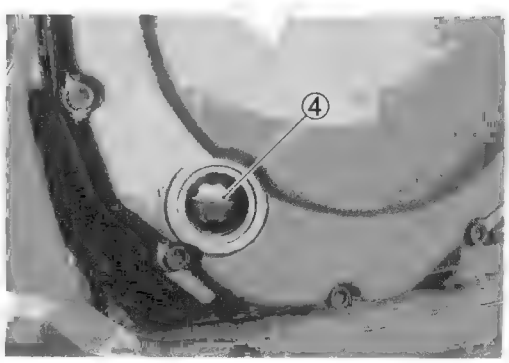

OIL FILTER REPLACEMENT

- Drain the engine oil as described in the engine oil replacement procedure.
- Remove the oil filter ① using the special tool.
- Apply engine oil lightly to the O-ring of the new oil filter, before installation.

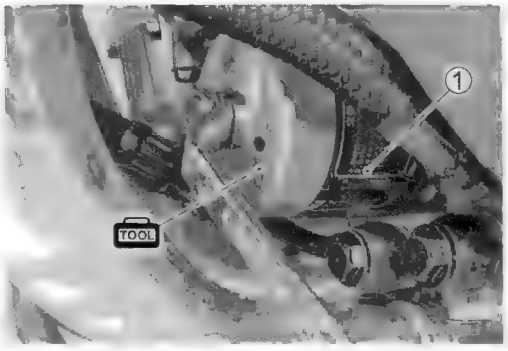

- Install the new oil filter. Turn it by hand until you feel that the oil filter O-ring has contacted the oil filter mounting surface. Then, tighten the oil filter two full turns using the special tool.

TOOL 09915-40610: Oil filter wrench

NOTE:
To properly tighten the oil filter, use the special tool. Never tighten the oil filter by hand.

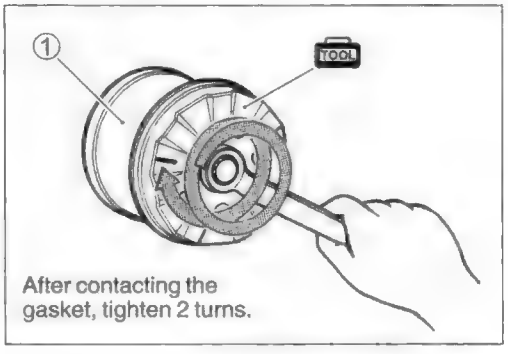

After contacting the gasket, tighten 2 turns.

- Add new engine oil and check the oil level as described in the engine oil replacement procedure.

DATA NECESSARY AMOUNT OF ENGINE OIL
Oil change: 3.3 L (3.5/2.9 US/Imp qt)
Oil and filter change: 3.5 L (3.7/3.1 US/Imp qt)
Engine overhaul: 4.6 L (4.9/4.0 US/Imp qt)

⚠ CAUTION

ONLY USE A GENUINE SUZUKI MOTORCYCLE OIL FILTER.
Other manufacturer's oil filters may differ in thread specifications (thread diameter and pitch), filtering performance and durability which may lead to engine damage or oil leaks. Also, do not use a genuine Suzuki automobile oil filter on this motorcycle.

FUEL HOSE

Inspect every 6 000 km (4 000 miles, 6 months).
Replace every four years.

- Remove the seat.
- Remove the fuel tank mounting bolts. (☞4-3)
- Lift up the fuel tank.

Inspect the fuel hoses ① for damage and fuel leakage. If any defects are found, the fuel hoses must be replaced.

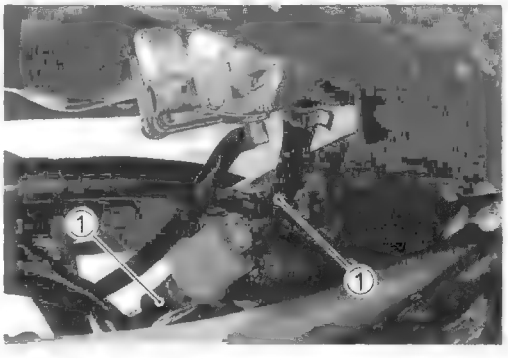

FUEL FILTER

Inspect every 6 000 km (4 000 miles, 6 months) and replace every 12 000 km (7 500 miles, 12 months).

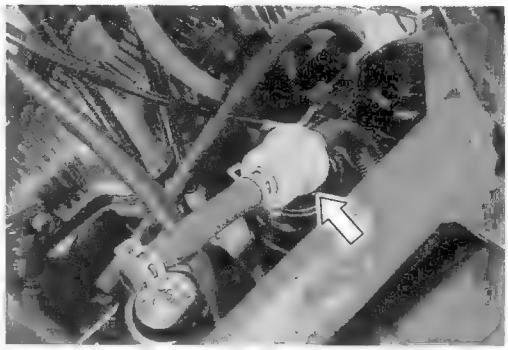

- Remove the fuel tank. (☞4-3)

Check the fuel filter for evidence of dirt and contamination. If present, replace the fuel filter with a new one.

ENGINE IDLE SPEED

Inspect initially at 1 000 km (600 miles, 1 month) and every 6 000 km (4 000 miles, 6 months) thereafter.

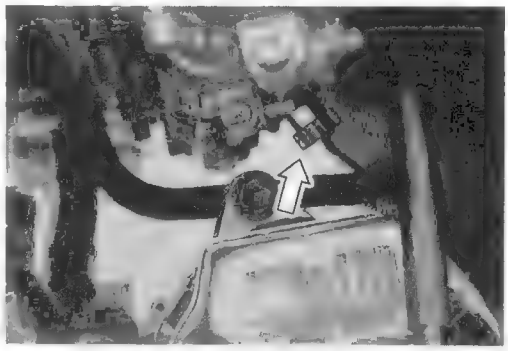

NOTE:
Make this adjustment when the engine is hot.

- Start the engine, turn the throttle stop screw and set the engine idle speed between 1 100 and 1 300 r/min.

DATA **Engine idle speed: 1 200 ± 100 r/min**

THROTTLE CABLE PLAY

Inspect initially at 1 000 km (600 miles, 1 month) and every 6 000 km (4 000 miles, 6 months) thereafter.

Adjust the throttle cable play Ⓐ as follows.

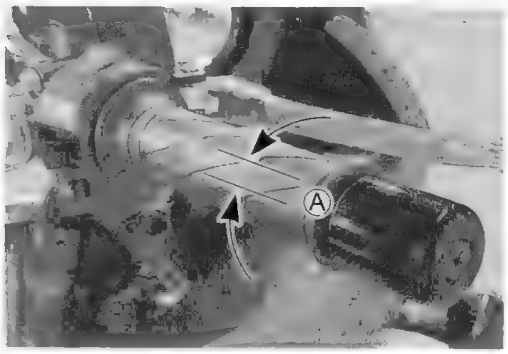

1st step:

- Loosen the locknut ① of the throttle returning cable ② and fully turn in the adjuster ③ fully into the threads.

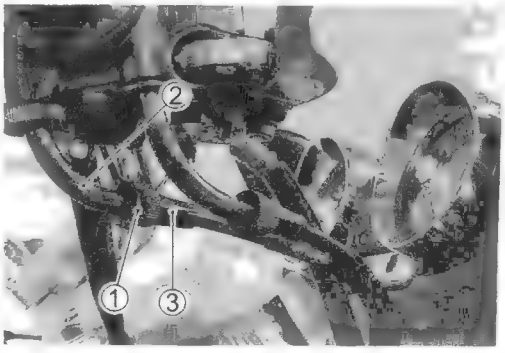

2nd step:
- Loosen the locknut ① of the throttle pulling cable ②.
- Turn the adjuster ③ in or out until the throttle cable play (at the throttle grip) Ⓐ is between 2 – 4 mm (0.08 – 0.16 in).
- Tighten the locknut ① while holding the adjuster ③.

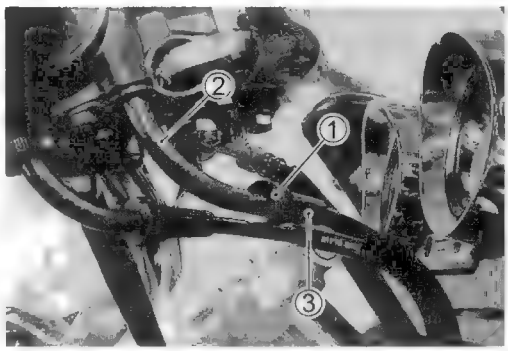

3rd step:
- While holding the throttle grip at the fully closed position, slowly turn out the adjuster ④ of the throttle returning cable ⑤ until resistance is felt.
- Tighten the locknut ⑥ while holding the adjuster ④.

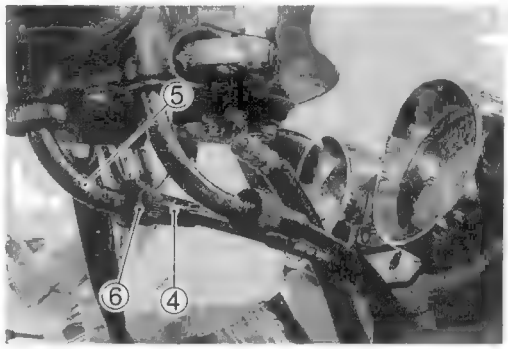

DATA Throttle cable play Ⓐ: 2 – 4 mm (0.08 – 0.16 in)

⚠ WARNING

After the adjustment is completed, check that handlebar movement does not raise the engine idle speed and that the throttle grip returns smoothly and automatically.

NOTE:
Major adjustments can be made at the carburetor side adjuster.

CARBURETOR SYNCHRONIZATION

Inspect initially at 1 000 km (600 miles, 1 month) (E-33 only) and every 12 000 km (7 500 miles, 12 months).

(☞4-23)

EVAPORATIVE EMISSION CONTROL SYSTEM (E-33 ONLY)

Inspect every 12 000 km (7 500 miles, 12 months).
Replace vapor hose every four years.

PAIR (AIR SUPPLY) SYSTEM

Inspect every 12 000 km (7 500 miles, 12 months).

(☞3-98)

CLUTCH CABLE PLAY

Inspect every 6 000 km (4 000 miles, 6 months).

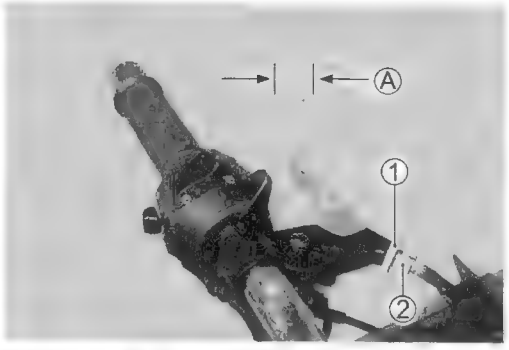

- Loosen the locknut ① and turn the adjuster ② all the way into the clutch lever assembly.

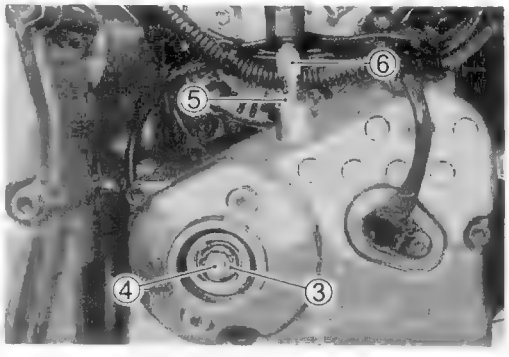

- Remove the clutch release cover.
- Loosen the locknut ③, and turn out the adjusting screw ④ two or three rotations.
- Then, slowly turn in the adjusting screw ④ until resistance is felt.
- Then, turn out the adjusting screw ④ ¼ of a turn, and tighten the locknut ③.
- Loosen the locknut ⑤, and turn the cable adjuster ⑥ to obtain 10 – 15 mm (0.4 – 0.6 in) of free play Ⓐ at the clutch lever end.
- Tighten the locknut ⑤.

DATA **Clutch cable play Ⓐ: 10 – 15 mm (0.4 – 0.6 in)**

DRIVE CHAIN

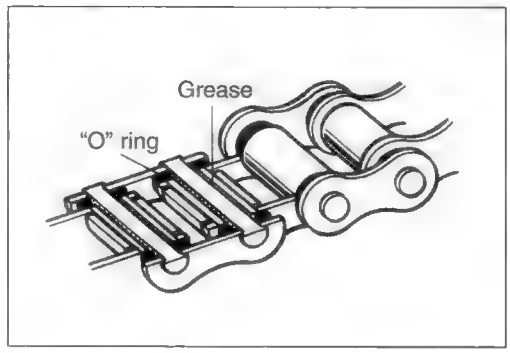

Inspect initially at 1 000 km (600 miles, 1 month) and every 6 000 km (4 000 miles, 6 months) thereafter. Lubricate every 1 000 km (600 miles).

With the transmission in neutral, support the motorcycle using the center-stand and turn the rear wheel slowly by hand. Visually check the drive chain for the possible defects listed below.

* Loose pins
* Excessive wear
* Damaged rollers
* Improper chain adjustment
* Kinked or binding links

If any defects are found, the drive chain must be replaced.

NOTE:
When replacing the drive chain, replace the drive chain and sprockets as a set.

CHECKING

- Remove the cotter pin. (For E-03, 28, 33)
- Loosen the axle nut ①.
- Tense the drive chain fully by turning both chain adjuster bolts ②.

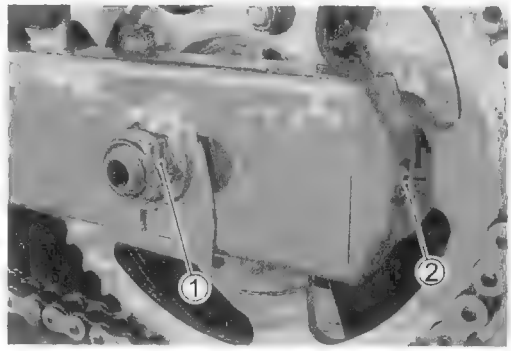

- Count out 21 pins (20 pitches) on the chain and measure the distance between the two points. If the distance exceeds the service limit, the chain must be replaced.

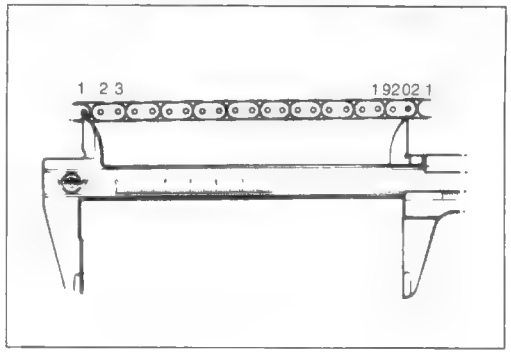

DATA **Drive chain 20-pitch length**
Service Limit: 319.4 mm (12.6 in)

ADJUSTING

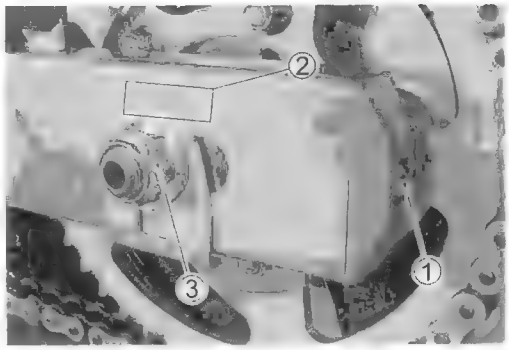

- Loosen or tighten both chain adjuster bolts ① until there is 25 – 35 mm (0.98 – 1.38 in) of slack at the middle of the chain between the engine and rear sprockets as shown. The reference marks ② on both sides of the swingarm and the edge of each chain adjuster must be aligned to ensure that the front and rear wheels are correctly aligned.
- Place the motorcycle on its side-stand for accurate adjustment.
- After adjusting the drive chain, tighten the axle nut ③ to the specified torque.
- Tighten both chain adjuster bolts ① securely.

Rear axle nut: 65 N·m (6.5 kgf·m, 47.0 lb-ft)

- Install a new cotter pin. (For E-03, 28, 33)

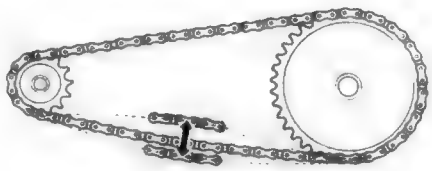

25 – 35 mm
(0.98 – 1.38 in)

CLEANING AND LUBRICATING

- Clean the drive chain with kerosine. If the drive chain tends to rust quickly, the intervals must be shortened.

⚠ CAUTION

Do not use trichloroethylene, gasoline or any similar solvent.
These fluids have too great a dissolving power for this chain and they can damage the O-rings. Use only kerosine to clean the drive chain.

- After cleaning and drying the chain, oil it with a heavyweight motor oil.

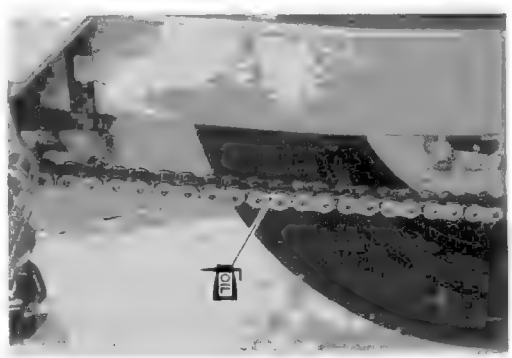

⚠ CAUTION

* **Do not use any oil sold commercially as "drive chain oil". Such oil can damage the O-rings.**
* **The standard drive chain is a RK50MFOZ1. SUZUKI recommends to use this standard drive chain as a replacement.**

BRAKES

(BRAKE)
Inspect initially at 1 000 km (600 miles, 1 month) and every 6 000 km (4 000 miles, 6 months) thereafter.

(BRAKE HOSE AND BRAKE FLUID)
Inspect every 6 000 km (4 000 miles, 6 months).
Replace hoses every 4 years. Replace fluid every 2 years.

BRAKE FLUID LEVEL

- Keep the motorcycle upright and place the handlebar straight.
- Check the brake fluid level by observing the lower limit line on the front and rear brake fluid reservoirs.
- When the brake fluid level is below the lower limit line, replenish with brake fluid that meets the following specification.

Specification and Classification: DOT 4

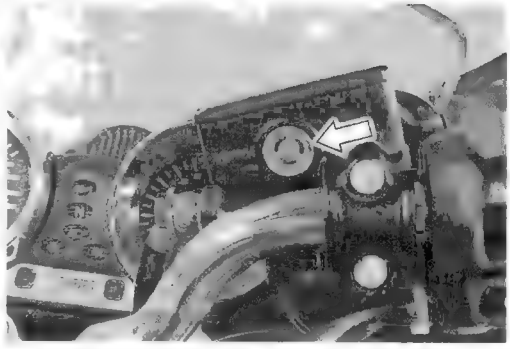

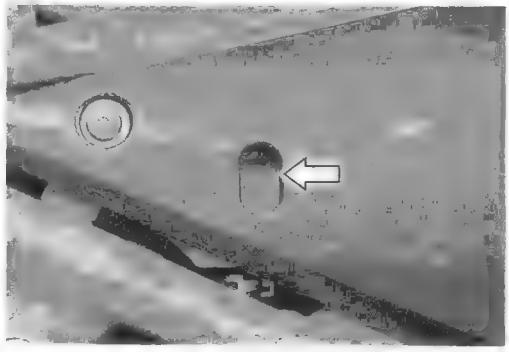

⚠ WARNING

- **The brake system of this motorcycle is filled with a glycol-based brake fluid. Do not use or mix different types of fluid such as silicone-based and petroleum-based fluids. Do not use any brake fluid taken from old, used or unsealed containers. Never re-use brake fluid left over from the last servicing or stored for a long period of time.**
- **Brake fluid, if it leaks, will interfere with safe running and immediately discolor painted surfaces. Check the brake hoses and hose joints for cracks and oil leakage before riding.**

BRAKE PADS

The extent of brake pad wear can be checked by observing the grooved limit line ① on the pad. When the wear exceeds the grooved limit line, replace the pads with new ones. (☞5-42 and -52)

⚠ CAUTION

Replace the brake pads as a set, otherwise braking performance will be adversely affected.

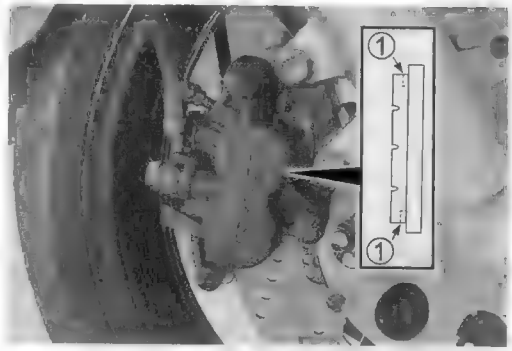

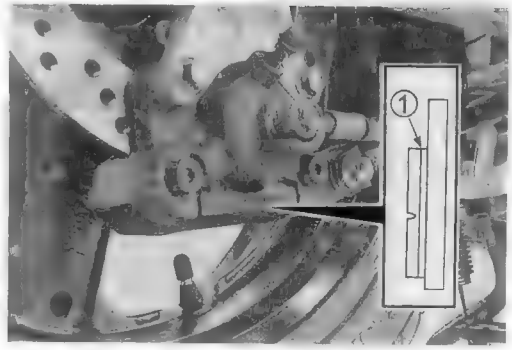

BRAKE PEDAL HEIGHT

- Loosen the locknut ①.
- Turn the push rod ② until the brake pedal is 50 mm (2.0 in) Ⓐ below the top of the footrest.
- Tighten the locknut ① securely.

DATA **Brake pedal height Ⓐ**
Standard: 50 mm (2.0 in)

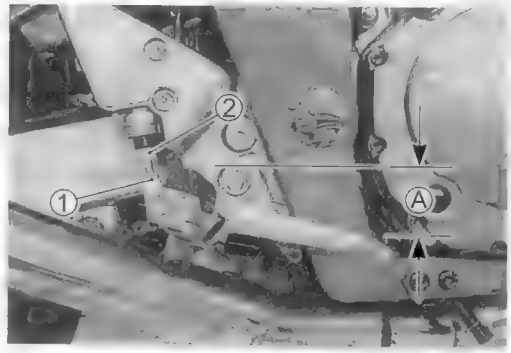

BRAKE LIGHT SWITCH

Adjust the rear brake light switch so that the brake light will come on just before pressure is felt when the brake pedal is depressed.

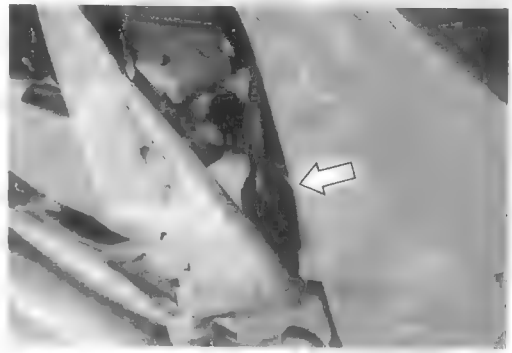

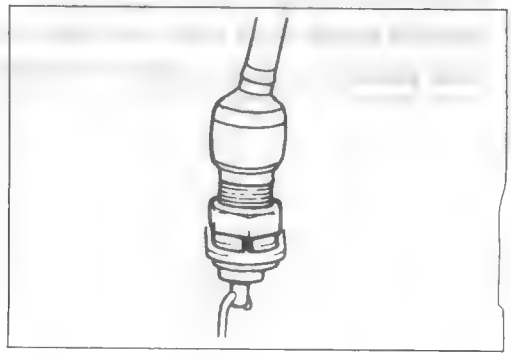

AIR BLEEDING THE BRAKE FLUID CIRCUIT

Air trapped in the brake fluid circuit acts like a cushion to absorb a large proportion of the pressure developed by the master cylinder and thus interferes with the full braking performance of the brake caliper. The presence of air is indicated by "sponginess" of the brake lever and also by lack of braking force. Considering the danger to which such trapped air exposes the machine and rider, it is essential that, after remounting the brake and restoring the brake system to the normal condition, the brake fluid circuit be purged of air in the following manner:

- Fill the master cylinder reservoir to the top of the inspection window. Replace the reservoir cap to prevent dirt from entering.
- Attach a hose to the air bleeder valve, and insert the free end of the hose into a receptacle.

- Front brake: Bleed air from the brake system.
- Squeeze and release the brake lever several times in rapid succession and squeeze the lever fully without releasing it. Loosen the air bleeder valve by turning it a quarter of a turn so that the brake fluid runs into the receptacle, this will remove the tension of the brake lever causing it to touch the handlebar grip. Then, close the air bleeder valve, pump and squeeze the lever, and open the valve. Repeat this process until the fluid flowing into the receptacle no longer contains air bubbles.

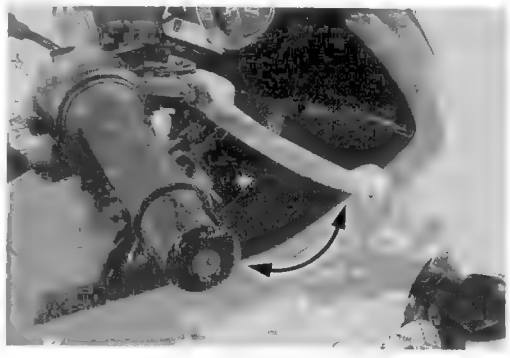

NOTE:
While bleeding the brake system, replenish the brake fluid in the reservoir as necessary. Make sure that there is always some fluid visible in the reservoir.

- Close the air bleeder valve, and disconnect the hose. Fill the reservoir with brake fluid to the top of the inspection window.

Air bleeder valve: 8 N·m (0.8 kgf·m, 6.0 lb-ft)

⚠ CAUTION

Handle brake fluid with care: the fluid reacts chemically with paint, plastics, rubber materials, etc.

- Rear brake: The only difference between bleeding the front and rear brakes is that the rear master cylinder is actuated by a pedal.

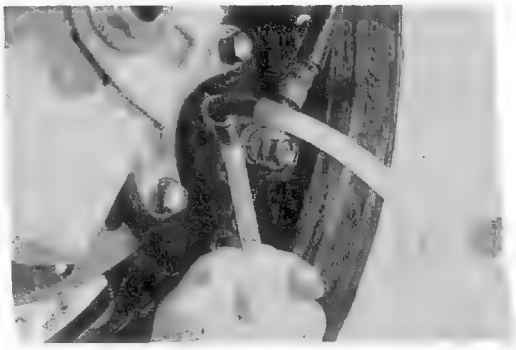

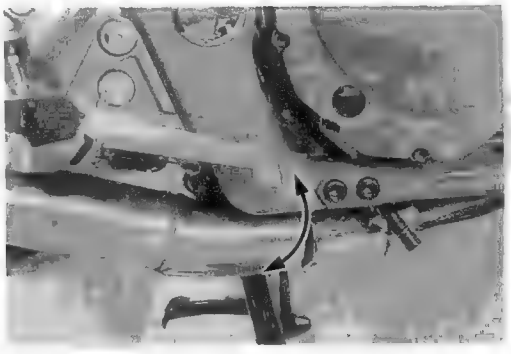

TIRES

Inspect every 6 000 km (4 000 miles, 6 months).

TIRE TREAD CONDITION

Operating the motorcycle with excessively worn tires will decrease riding stability and consequently invite a dangerous situation. It is highly recommended to replace a tire when the remaining depth of the tire tread reaches the following specification.

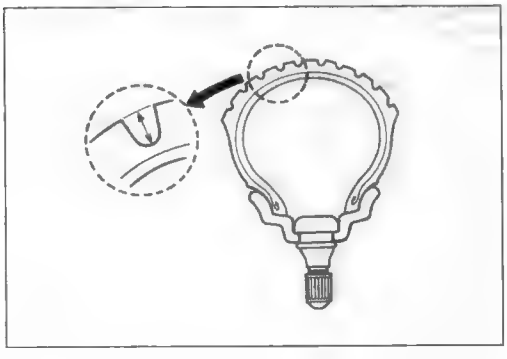

09900-20805: Tire depth gauge

Tire tread depth

Service limit:	**FRONT**	**1.6 mm (0.06 in)**
	REAR	**2.0 mm (0.08 in)**

TIRE PRESSURE

If the tire pressure is too high or too low, steering will be adversely affected and tire wear will increase. Therefore, maintain the correct tire pressure for good roadability and a longer tire life. Cold inflation tire pressure is as follows.

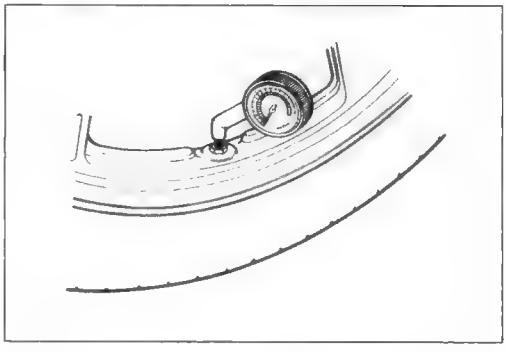

COLD INFLATION TIRE PRESSURE	SOLO RIDING			DUAL RIDING		
	kPa	kgf/cm²	psi	kPa	kgf/cm²	psi
FRONT	225	2.25	33	225	2.25	33
REAR	250	2.50	36	250	2.50	36

⚠ CAUTION

The standard tire fitted on this motorcycle is a 120/60 ZR17 (55 W) for the front (BRIDGESTONE BT56F F) and a 160/60 ZR17 (69 W) for the rear (BRIDGESTONE BT56R F). The use of tires other than those specified may cause instability. It is highly recommended to use the specified tires.

STEERING

Inspect initially at 1 000 km (600 miles, 1 month) and every 12 000 km (7 500 miles, 12 months) thereafter.

The steering should be adjusted properly for smooth turning of the handlebars and safe operation. Overtight steering prevents smooth turning of the handlebars and too loose steering will cause poor stability. Check that there is no play in the front fork. Support the motorcycle so that the front wheel is off the ground. With the wheel facing straight ahead, grasp the lower fork tubes near the axle and pull forward. If play is found, readjust the steering. (☞5-25)

FRONT FORKS

Inspect every 12 000 km (7 500 miles, 12 months).

Inspect the front fork for oil leakage, scoring or scratches on the outer surface of the inner tubes. Replace any defective parts, if necessary. (☞5-15)

REAR SUSPENSION

Inspect every 12 000 km (7 500 miles, 12 months).

Inspect the rear shock absorbers for oil leakage and check that there is no play in the swingarm. (☞5-37)

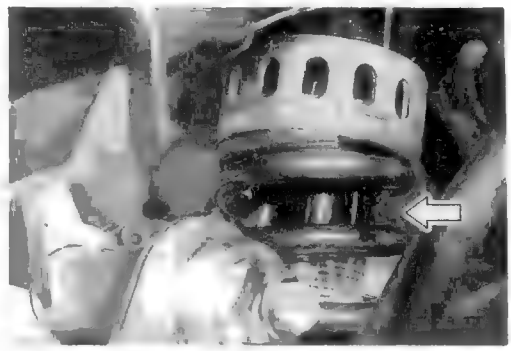

CHASSIS BOLTS AND NUTS

Tighten initially at 1 000 km (600 miles, 1 month) and every 6 000 km (4 000 miles, 12 months) thereafter.

Check that all chassis bolts and nuts are tightened to their specified torque. (Refer to page 2-23 for the locations of the following nuts and bolts.)

ITEM	N·m	kgf·m	lb-ft
① Steering stem head nut	65	6.5	47.0
② Front fork upper pinch bolt	23	2.3	16.5
③ Front fork lower pinch bolt	23	2.3	16.5
④ Front fork cap bolt	23	2.3	16.5
⑤ Front axle	65	6.5	47.0
⑥ Front axle pinch bolt	23	2.3	16.5
⑦ Handlebar holder bolt	23	2.3	16.5
⑧ Front brake master cylinder clamp bolt	10	1.0	7.0
⑨ Front brake caliper mounting bolt	39	3.9	28.0
⑩ Brake hose union bolt (front & rear)	23	2.3	16.5
⑪ Air bleeder valve (front & rear)	8	0.8	6.0
⑫ Brake disc bolt (front & rear)	23	2.3	16.5
⑬ Rear brake caliper mounting bolt	25	2.5	18.0
⑭ Rear brake caliper housing bolt	30	3.0	21.5
⑮ Rear brake master cylinder mounting bolt	23	2.3	16.5
⑯ Rear brake master cylinder rod locknut	18	1.8	13.0
⑰ Front footrest bolt	39	3.9	28.0
⑱ Front footrest bracket bolt	23	2.3	16.5
⑲ Swingarm pivot nut	100	10.0	72.5
⑳ Rear shock absorber mounting nut (upper & lower)	50	5.0	36.0
㉑ Cushion lever mounting nut	78	7.8	56.5
㉒ Cushion lever rod mounting nut	78	7.8	56.5
㉓ Rear axle nut	100	10.0	72.5
㉔ Rear sprocket nut	50	5.0	36.0
㉕ Rear torque link nut (front & rear)	35	3.5	25.5

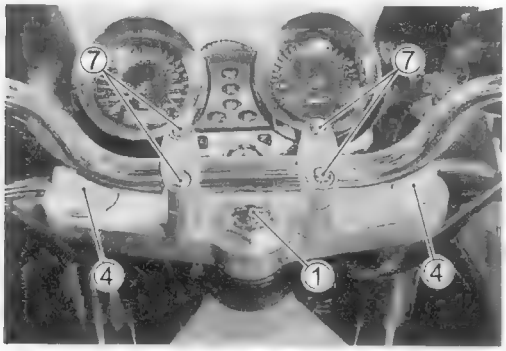
7
7
4
1
4

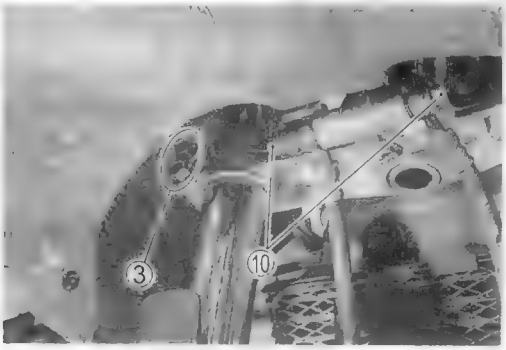
3
10

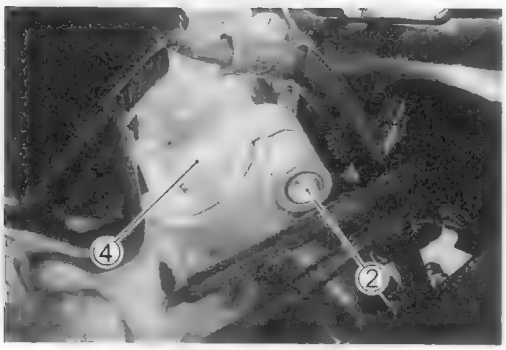
4
2

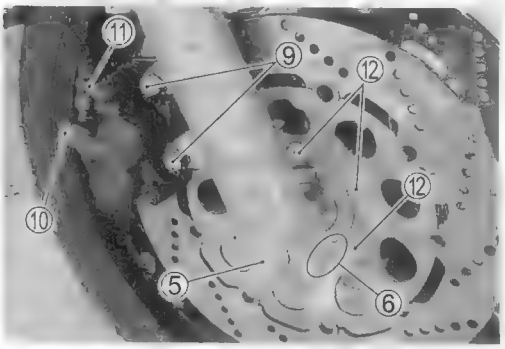
11
9
12
12
10
5
6

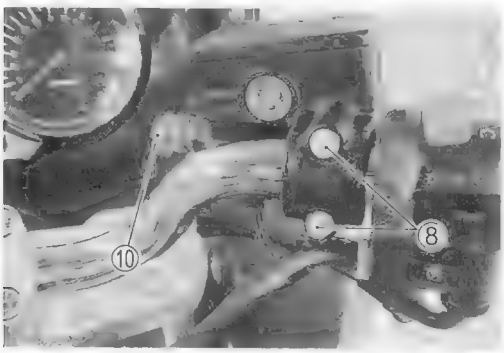
10
8

12
11
13
13
14
25
10
14

20

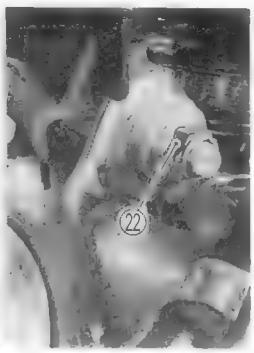
22

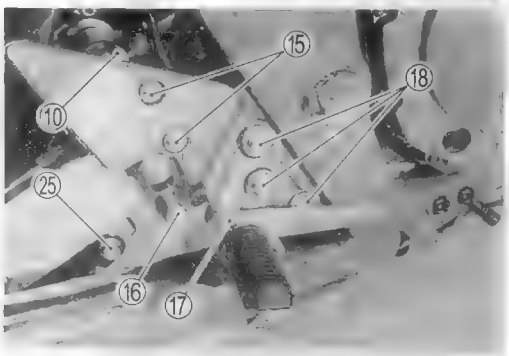
15
18
10
25
16
17

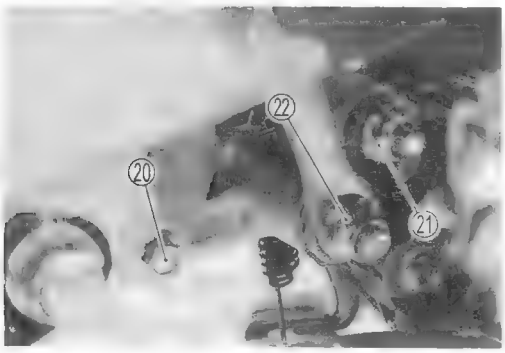
22
20
21

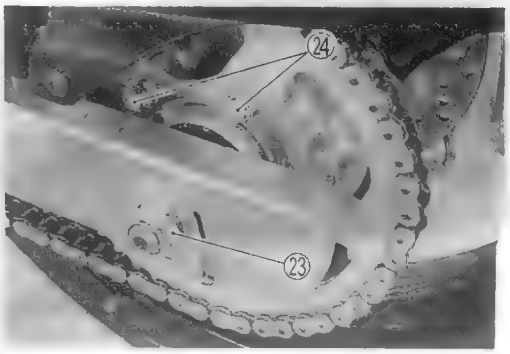
24
23

COMPRESSION PRESSURE CHECK

The compression pressure reading of a cylinder is a good indicator of its internal condition. The decision to overhaul the cylinder is often based on the results of a compression test. Periodic maintenance records kept at your dealership should include compression readings for each maintenance service.

COMPRESSION PRESSURE SPECIFICATION

Standard	Limit	Difference
1 000 – 1 500 kPa (10 – 15 kgf/cm²) 142 – 213 psi	800 kPa (8 kgf/cm²) 114 psi	200 kPa (2 kgf/cm²) 28 psi

Low compression pressure can indicate any of the following conditions:

* Excessively worn cylinder walls
* Worn piston or piston rings
* Piston rings stuck in grooves
* Poor valve seating
* Ruptured or otherwise defective cylinder head gasket

Overhaul the engine in the following cases:

* Compression pressure in one of the cylinders is less than 800 kPa (8 kgf/cm², 114 psi).
* The difference in compression pressure between any two cylinders is more than 200 kPa (2 kgf/cm², 28 psi).
* All compression pressure readings are below 1 000 kPa (10 kgf/cm², 142 psi) even when they measure more than 800 kPa (8 kgf/cm², 114 psi).

COMPRESSION TEST PROCEDURE

NOTE:

* *Before testing the engine for compression pressure, make sure that the cylinder head nuts are tightened to the specified torque values and the valves are properly adjusted.*
* *Have the engine warmed-up before testing.*
* *Make sure that the battery is fully-charged.*

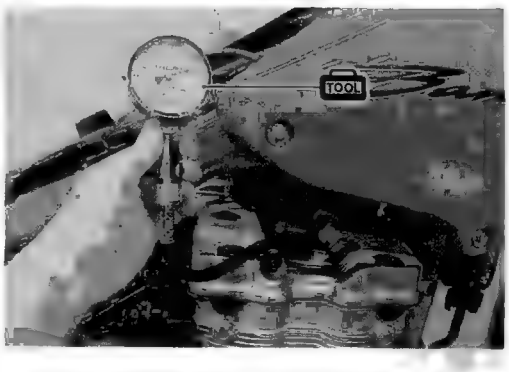

Remove the related parts and test the compression pressure in the following manner.

- Remove the fuel tank. (☞4-3)
- Remove all of the spark plugs.
- Install the compression gauge and adaptor in the spark plug hole. Make sure that the connection is tight.
- Keep the throttle grip in the fully opened position.
- Press the starter button and crank the engine for a few seconds. Record the maximum gauge reading as the cylinder compression.
- Repeat this procedure with the other cylinders.

TOOL 09915-64510: Compression gauge set
09915-63310: Adaptor

OIL PRESSURE CHECK

Check the engine oil pressure periodically. This will give a good indication of the condition of the moving parts.

OIL PRESSURE SPECIFICATION

Above 300 kPa (3.0 kgf/cm², 43 psi) **Below 600 kPa (6.0 kgf/cm², 85 psi)** **at 3 000 r/min., oil temp. at 60°C (140°F)**

If the oil pressure is lower or higher than the specification, the following causes may be considered.

LOW OIL PRESSURE

* Clogged oil filter
* Oil leakage from the oil passage
* Damaged O-ring
* Defective oil pump
* Combination of the above items

HIGH OIL PRESSURE

* Engine oil viscosity is too high
* Clogged oil passage
* Combination of the above items

OIL PRESSURE TEST PROCEDURE

Start the engine and check if the oil pressure indicator light is turned on. If the light stays on, check the oil pressure indicator light circuit. If the circuit is OK, check the oil pressure in the following manner.

- Remove the main oil gallery plug ①.
- Install the oil pressure gauge and adaptor into the main oil gallery.
- Warm up the engine as follows:
  Summer: 10 min. at 2 000 r/min.
  Winter: 20 min. at 2 000 r/min.
- After warm up, increase the engine speed to 3 000 r/min. (observe the tachometer), and read the oil pressure gauge.

TOOL 09915-74510: Oil pressure gauge
09915-74540: Oil pressure gauge attachment
09915-77330: Meter (for high pressure)

Main oil gallery plug: 40 N·m (4.0 kgf·m, 29.0 lb-ft)

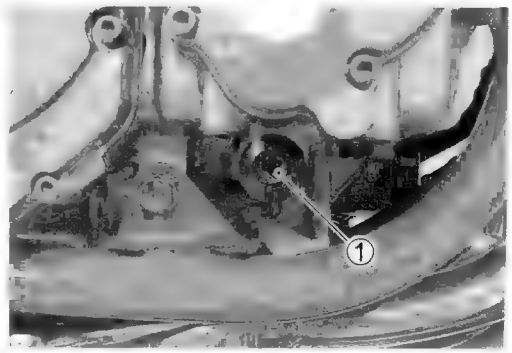

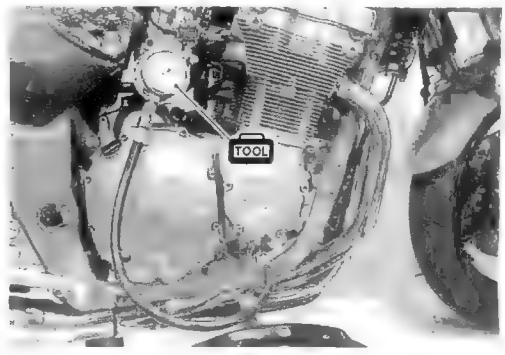

ENGINE

CONTENTS

ENGINE COMPONENTS REMOVABLE WITH ENGINE IN PLACE 3- 2
ENGINE REMOVAL AND REINSTALLATION 3- 3
ENGINE REMOVAL 3- 3
ENGINE REINSTALLATION 3- 8
ENGINE DISASSEMBLY AND REASSEMBLY 3-12
ENGINE COMPONENTS INSPECTION AND SERVICE 3-49
CAMSHAFT/CYLINDER HEAD 3-49
CAM CHAIN TENSIONER 3-51
VALVE 3-52
VALVE GUIDE 3-55
VALVE SEAT 3-56
VALVE SPRING 3-59
CYLINDER 3-64
PISTON 3-64
PISTON RING 3-65
PISTON PIN 3-66
CLUTCH 3-68
STARTER CLUTCH 3-69
GEARSHIFT LINKAGE 3-70
TRANSMISSION 3-72
CONROD 3-79
CRANKSHAFT 3-82
ENGINE LUBRICATION SYSTEM 3-87
PAIR (AIR SUPPLY) SYSTEM 3-98

ENGINE COMPONENTS REMOVABLE WITH ENGINE IN PLACE

The parts listed below can be removed and reinstalled without removing the engine from the frame. Refer to the page listed in each section for removal and reinstallation instructions.

ENGINE CENTER

	See page
Exhaust pipe/muffler	3-6 and -9
Oil hoses	3-12 and -48
Oil filter	3-12 and -48
Oil cooler	3-6 and -9
Oil pan	3-21 and -32
Engine oil pressure regulator	3-88 and -89
Oil sump filter	3-88 and -89
Carburetors	3-4 and -10
Cam chain tensioner	3-13 and -45
Cylinder head cover	3-12 and -47
Camshafts	3-13 and -42
Cylinder head	3-14 and -41
Cylinder	3-15 and -40
Pistons	3-15 and -39
Starter motor	3-16 and -38
Generator	3-16 and -38
PAIR system	3-4, -12, -48 and -98

ENGINE LEFT SIDE

	See page
Gearshift lever	3-5 and -11
Engine sprocket cover	3-5 and -10
Engine sprocket and drive chain	3-5 and -10
Gear position switch body	3-20 and -32
Starter clutch cover	3-17 and -37
Starter idle gear	3-19 and -33
Starter clutch	3-20 and -33

ENGINE RIGHT SIDE

	See page
Clutch cover	3-16 and -36
Signal generator	3-16 and -37
Oil pressure switch	3-16 and -37
Clutch pressure, drive and driven plates	3-17 and -35
Clutch sleeve hub	3-18 and -35
Oil pump driven gear	3-19 and -34
Generator/oil pump drive gears	3-18 and -34
Primary driven gear	3-18 and -35
Gearshift shaft	3-19, -34, -70 and -71
Gearshift pawl and cam driven gear	3-19 and -33

ENGINE REMOVAL AND INSTALLATION

ENGINE REMOVAL

Before taking the engine out of the frame, wash the engine using a steam cleaner. Engine removal is sequentially explained in the following steps.

- Remove the seat and side frame covers. (☞5-5 and -6)
- Remove the fuel tank. (☞4-3)
- Remove the fuel tank mounting bracket bolts ①.
- Remove the air cleaner box mounting bolts ②.

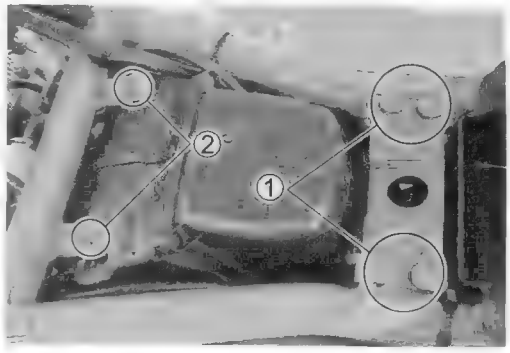

- Remove the document tray ③.

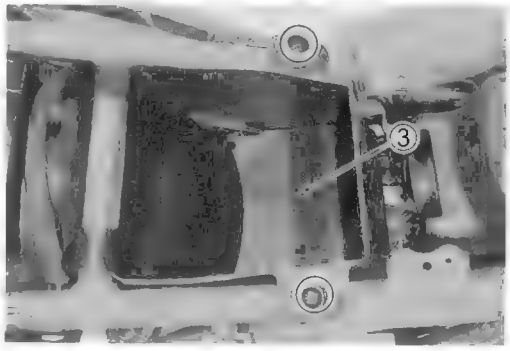

- Remove the battery.

NOTE:
First disconnect the battery ⊖ lead wire, then disconnect the battery ⊕ lead wire.

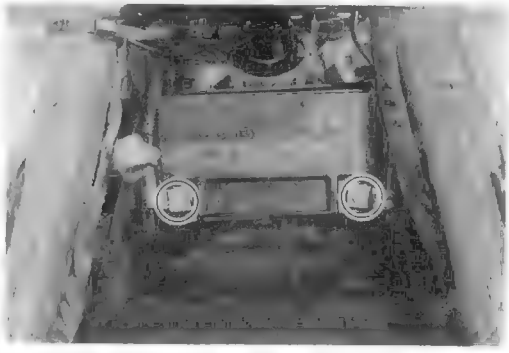

- Remove the oil drain plug ④ and drain the engine oil. (☞2-9)

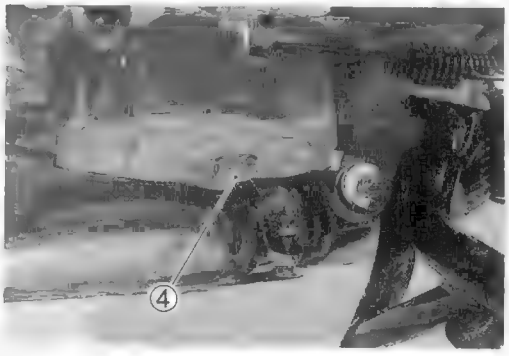

- Disconnect all of the spark plug caps ⑤.
- Disconnect the breather hose ⑥.

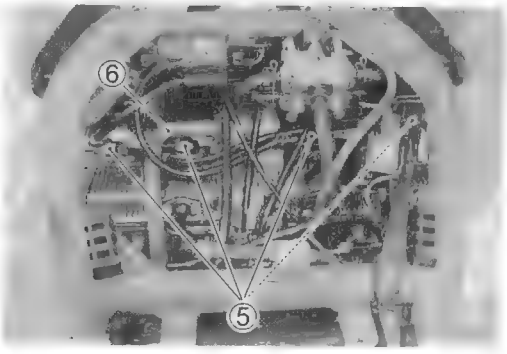

- Disconnect the PAIR valve hoses ①, ② and ③.
  ① Air cleaner hose
  ② Vacuum hose
  ③ PAIR hoses

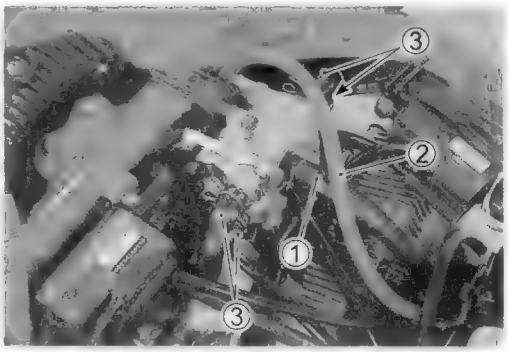

- Loosen the respective carburetor clamp screws ④.

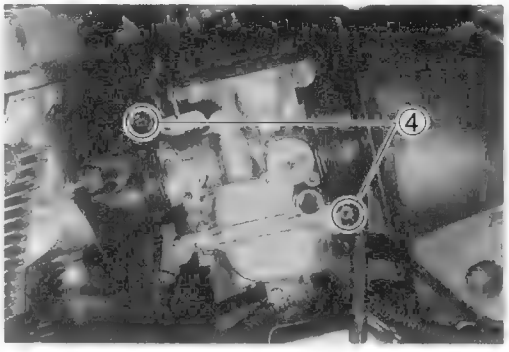

- Disconnect the throttle position sensor lead wire coupler ⑤.
- Slightly move the air cleaner box backward.

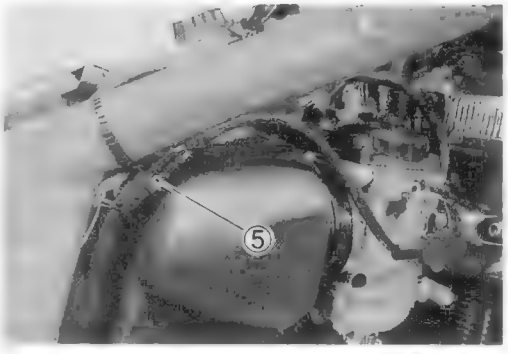

- Remove the carburetor assembly by disconnecting the starter cable ⑥ and throttle cables ⑦.

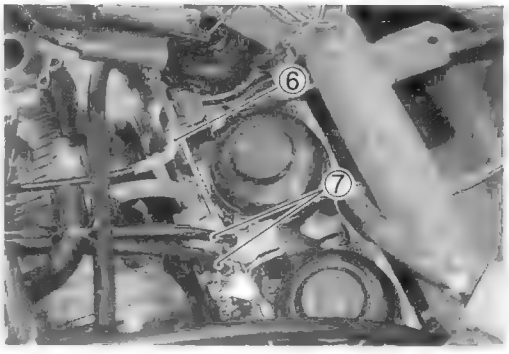

- Remove the wire clamp.
- Disconnect the various lead wires.
  ⑧ Gear position switch
  ⑨ Signal generator
  ⑩ Oil pressure switch
  ⑪ Speed sensor
  ⑫ Side-stand switch

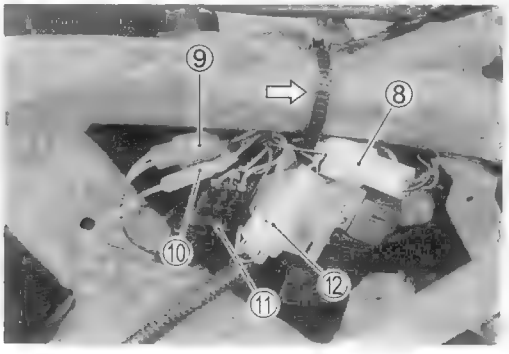

- Remove the two wire clamps.
- Disconnect the starter motor lead wire ①.
- Disconnect the generator lead wire ② and coupler ③.

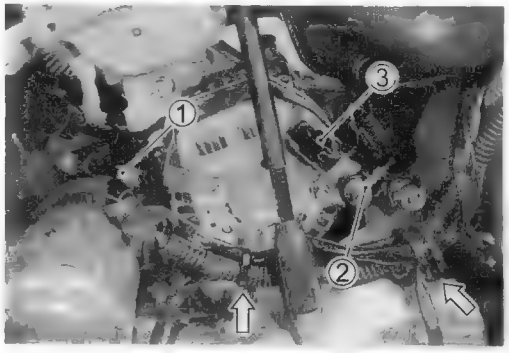

- Remove the gearshift lever by removing its mounting bolt.
- Remove the engine sprocket cover by removing the bolts.

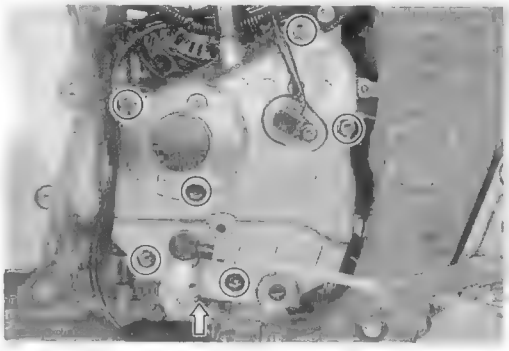

- Remove the speed sensor rotor ④.
- Remove the engine sprocket nut ⑤ while depressing the rear brake pedal.

Engine sprocket nut: 115 N·m (11.5 kgf·m)

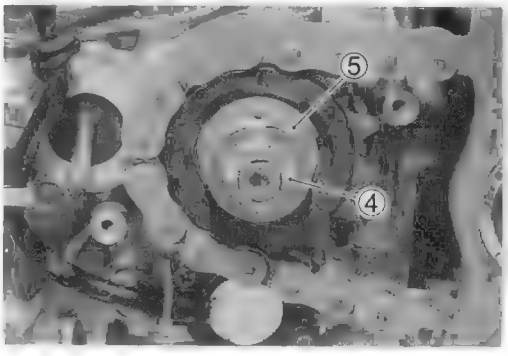

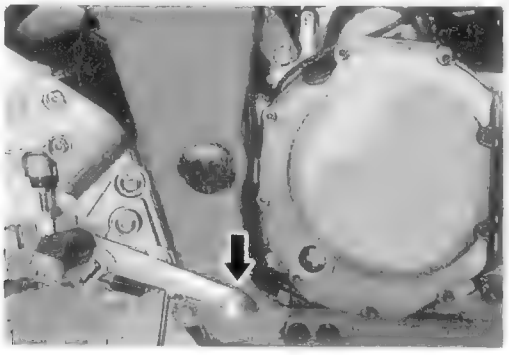

- Loosen the rear axle nut ⑥ and chain adjusters ⑦ to provide additional chain slack.
- Remove the engine sprocket.

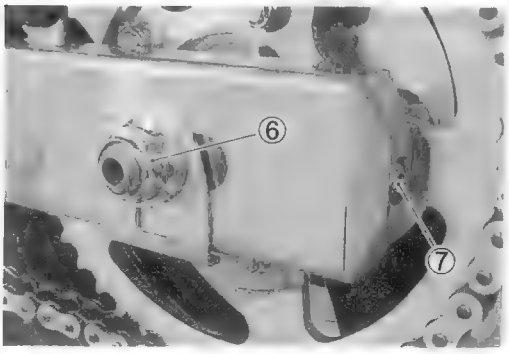

- Remove the eight exhaust pipe bolts.

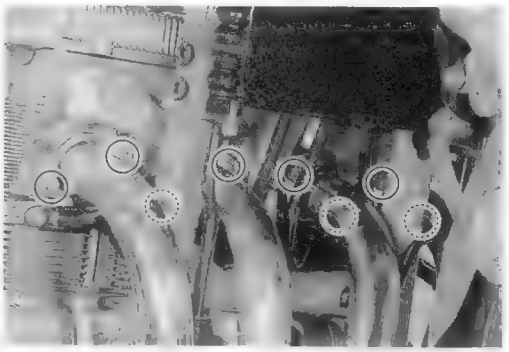

- Remove the muffler mounting bolts.

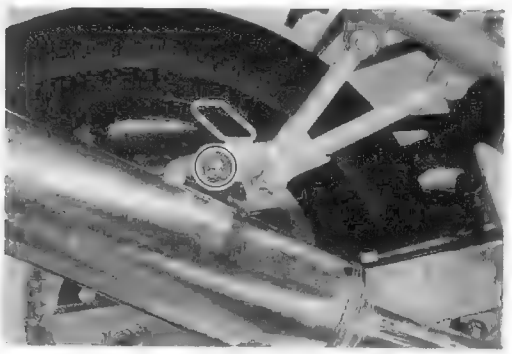

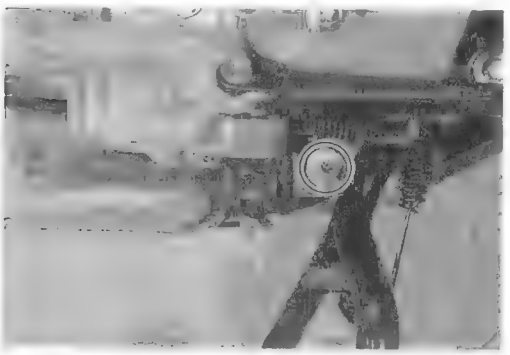

- Remove the oil cooler hose union bolts ①.

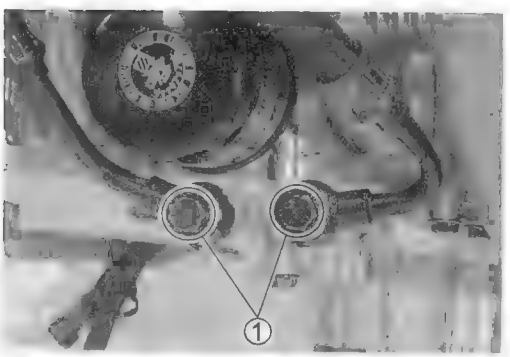

- Remove the oil cooler by removing the mounting bolts ②.

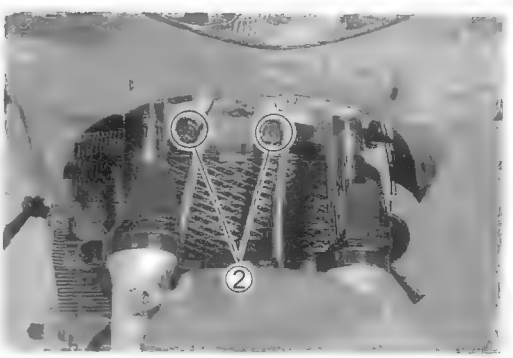

- Suppport the engine with a proper engine jack.
- Remove the frame down tube mounting bolts and nuts.
- Remove the frame down tube ①.
- Remove the engine mounting bolts, nuts, spacer and brackets.
- Gradually lower the engine.

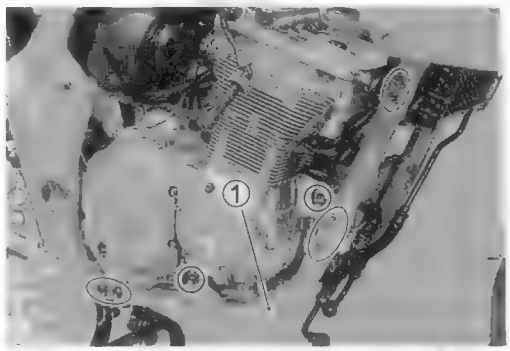

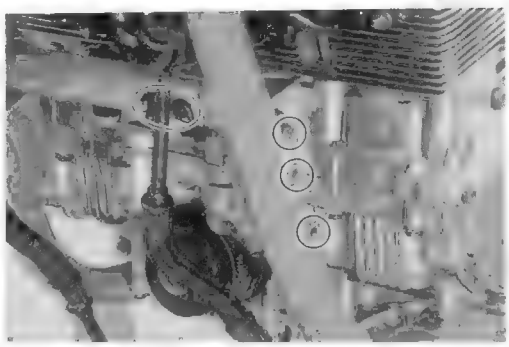

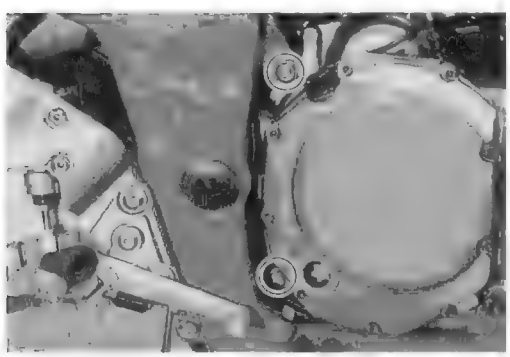

ENGINE REINSTALLATION

Reinstall the engine in the reverse order of engine removal.

- Insert the two long bolts from left side. Install the brackets, spacer, bolts and nuts properly, as shown in the following illustration.

NOTE:

The engine mounting nuts are self-locking. Once the nuts have been removed, they are no longer of any use. Be sure to use new nuts and tighten them to the specified torque.

ITEM	N·m	kgf·m	lb-ft
①, ②	75	7.5	54.0
③, ④	55	5.5	40.0

NOTE:

When reusing the removed engine mounting bolts (② and ④), apply a small quantity of the THREAD LOCK "1342" to their threads.

1342 99000-32050: THREAD LOCK "1342"

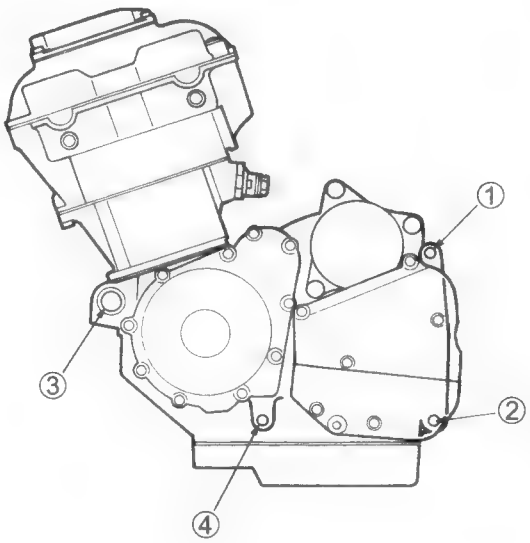

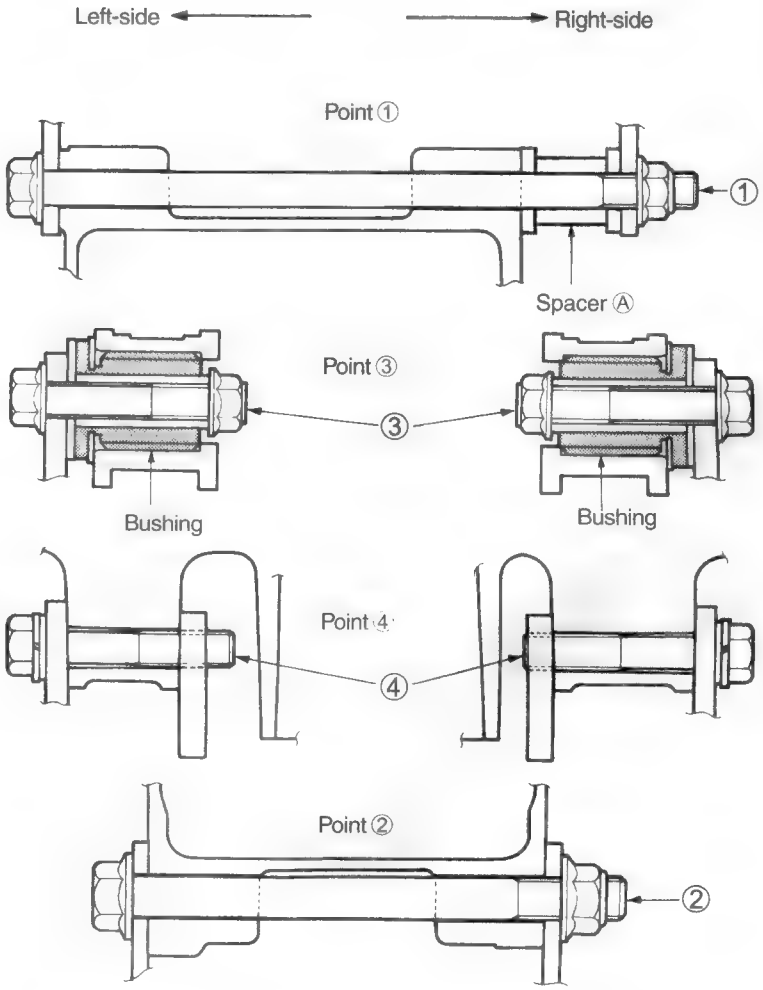

LENGTH

Bolt ①	180 mm (7.1 in)
Bolt ②	130 mm (5.1 in)
Bolt ③	55 mm (2.2 in)
Bolt ④	55 mm (2.2 in)
Spacer RH Ⓐ	27 mm (1.1 in)

Other engine mounting bolts and frame down tube mounting bolts.

32 N·m (3.2 kgf·m, 23.0 lb-ft)

- Tighten the oil cooler mounting bolts ① to the specified torque.

Oil cooler mounting bolt: 10 N·m (1.0 kgf·m, 7.0 lb-ft)

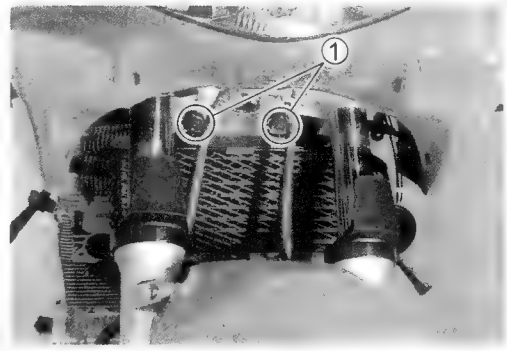

- Tighten the oil cooler hose union bolts ② to the specified torque.

Oil cooler hose union bolt: 23 N·m (2.3 kgf·m, 16.5 lb-ft)

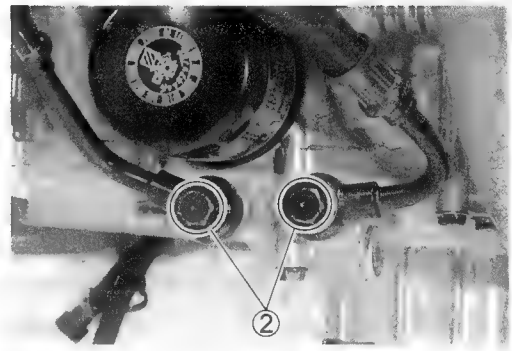

⚠ CAUTION

Use a new gasket washer to prevent oil leakage.

NOTE:
When installing a new exhaust pipe/muffler assembly connector, remove all of the old sealer from the exhaust pipe and from inside the muffler. Apply the exhaust gas sealer to both the inside and outside of the new exhaust pipe/muffler assembly connector.

EXHAUST GAS SEALER: PREMATEX 1372

- Install the exhaust pipe gaskets ③.

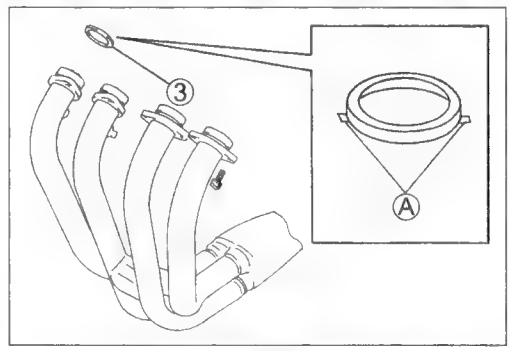

⚠ CAUTION

Be sure to face the tabs Ⓐ on the exhaust pipe gasket ③ to the inside when installing it.

- Tighten the exhaust pipe bolts and muffler mounting bolts to the specified torque.

Exhaust pipe bolt: 23 N·m (2.3 kgf·m, 16.5 lb-ft)

Muffler mounting bolt: 29 N·m (2.9 kgf·m, 21.0 lb-ft)

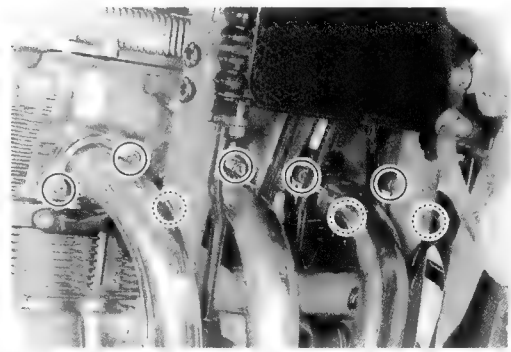

- Apply THREAD LOCK SUPER "1303" to the driveshaft.

1303 99000-32030: THREAD LOCK SUPER "1303"

- Tighten the engine sprocket nut ① to the specified torque.

Engine sprocket nut ①: 115 N·m (11.5 kgf·m, 83.0 lb-ft)

- Apply a small quantity of THREAD LOCK "1342" to the speed sensor rotor bolt.

1342 99000-32050: THREAD LOCK "1342"

- Tighten the speed sensor rotor bolt ② to the specified torque.

Speed sensor rotor bolt ②: 20 N·m (2.0 kgf·m, 14.5 lb-ft)

- Before installing the engine sprocket cover, apply a small quantity of SUZUKI SUPER GREASE "A" to the clutch release mechanism.

A 99000-25010: SUZUKI SUPER GREASE "A"

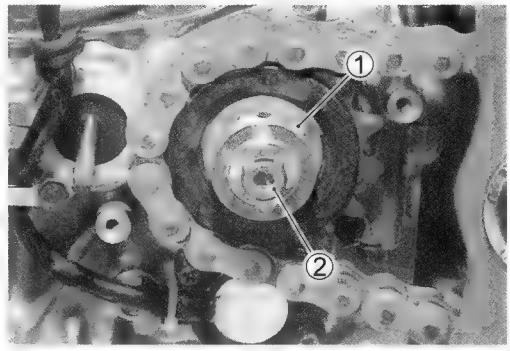

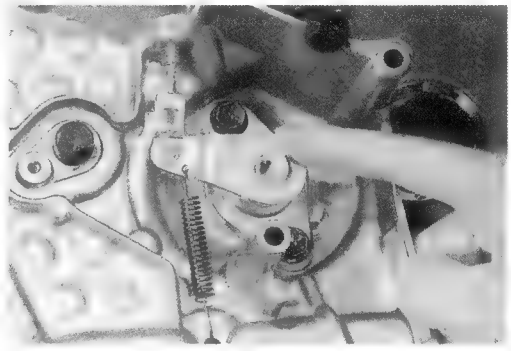

- Install the spark plug caps onto the spark plugs. Make sure that each spark plug cap is installed in the correct location. The number on each spark plug cord refers to the appropriate cylinder.

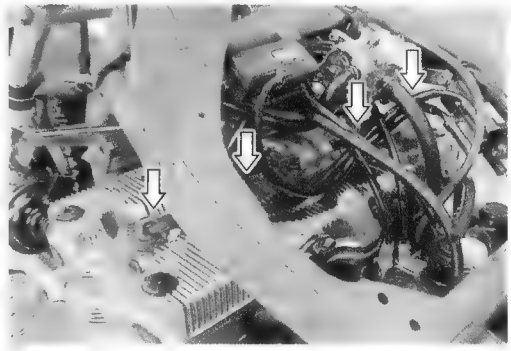

- Position the carburetor clamps as shown.

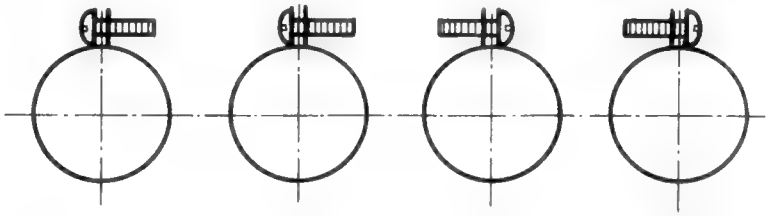

Carburetor clamp position (air cleaner side)

L.H ← → R.H

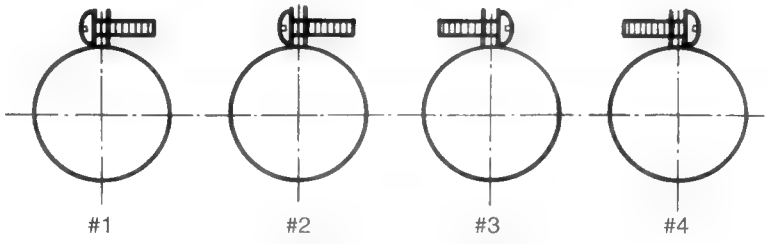

Carburetor clamp position (engine side)

- After remounting the engine, route the wire harness, cables and hoses properly. (☞7-12)

- Install the gearshift lever to the gearshift shaft in the correct position.

DATA **Gearshift lever height Ⓐ**
Standard: 55 mm (2.2 in)

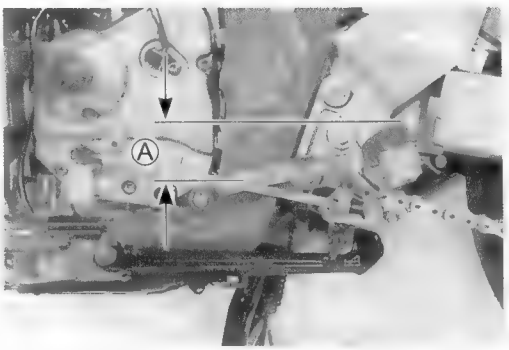

- Tighten the oil drain plug ① to the specified torque.

Oil drain plug: 23 N·m (2.3 kgf·m, 16.5 lb-ft)

- Pour 3.3 L (3.5/2.9 US/Imp qt) of SF or SG classified (API) engine oil, with a viscosity rating of 10W40 (SAE), into the engine after overhauling it.
- Start up the engine and allow it run for several minutes at idle speed and then stop the engine. Wait three minutes and then check that the oil level remains between the marks on the oil level inspection window.

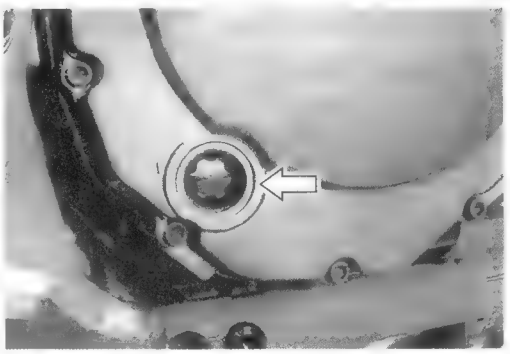

Oil change	3 300 ml (3.5/2.9 US/Imp qt)
Oil and filter change	3 500 ml (3.7/3.1 US/Imp qt)
Engine overhaul	4 600 ml (4.9/4.0 US/Imp qt)

- Adjust the following items to specification.
  *Throttle cable play ..... ☞2-11
  *Engine idle speed ..... ☞2-11
  *Carburetor synchronization ..... ☞4-23
  *Drive chain ..... ☞2-15
  *Clutch cable play ..... ☞2-13

ENGINE DISASSEMBLY AND REASSEMBLY

⚠ CAUTION

Identify the position of each removed part. Organize the parts in their respective groups (e.g., intake, exhaust) so that they can be reinstalled in their original positions.

ENGINE DISASSEMBLY

- Remove each PAIR valve pipe and hose.

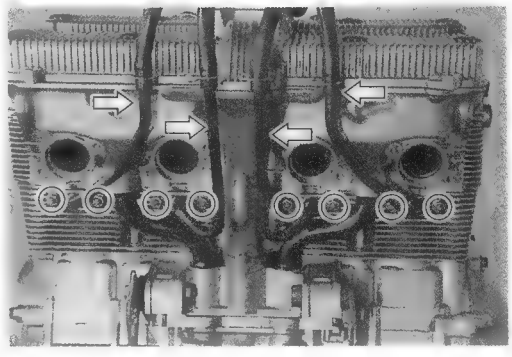

- Remove the oil filter ① using the special tool.

TOOL 09915-40610: Oil filter wrench

NOTE:
Refer to page 2-10 for installation procedures.

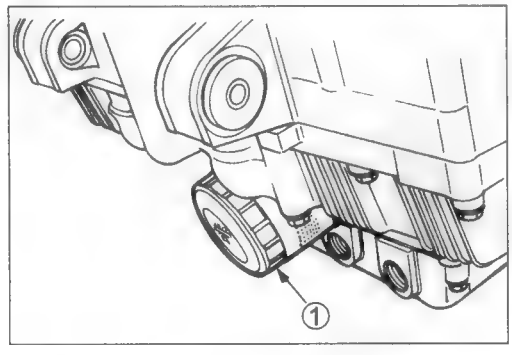

- Remove the left and right oil hoses ②.

TOOL 09911-73730: 5 mm "T" type hexagon wrench

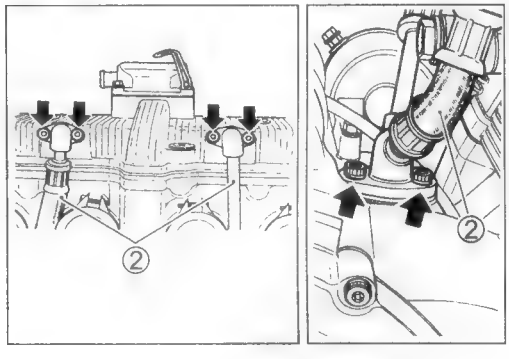

- Remove the cylinder head cover ③.

TOOL 09914-25811: 6 mm "T" type hexagon wrench

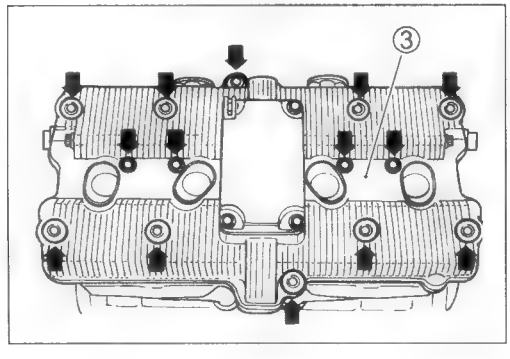

- Remove the signal generator cover ①.

TOOL **09911-73730: 5 mm "T" type hexagon wrench**

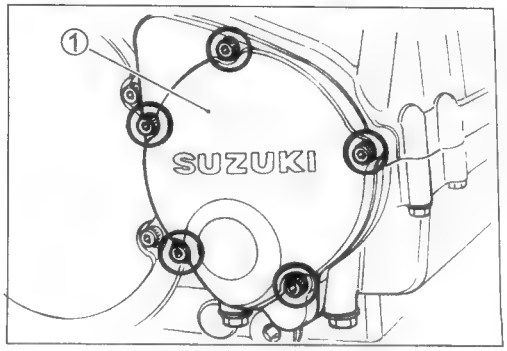

- Remove all of the spark plugs.
- Turn the crankshaft clockwise and align the "T" mark on the signal generator rotor with the center of the pickup coil. Also, position the notches ② on the right end of each camshaft as shown.

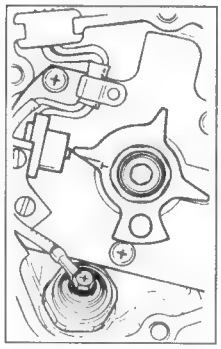

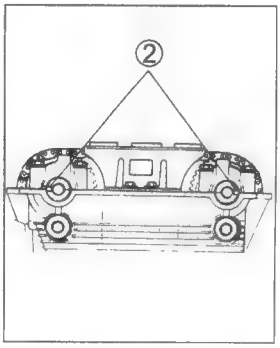

- Remove the cam chain guide ③.

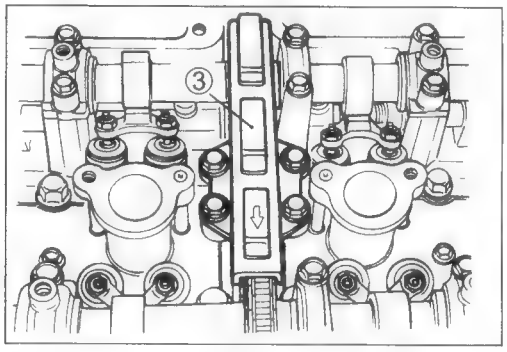

- After removing the spring holder bolt ④ and spring ⑤, remove the cam chain tensioner ⑥.

TOOL **09911-73730: 5 mm "T" type hexagon wrench**

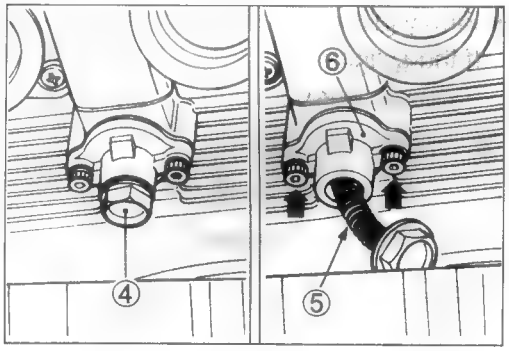

- Remove the camshaft journal holders.

NOTE:
Be sure to loosen the camshaft journal holder bolts evenly and in a crisscross pattern.

- Remove the intake ⑦ and exhaust camshafts ⑧.

NOTE:
See page 3-49 for camshaft inspection.

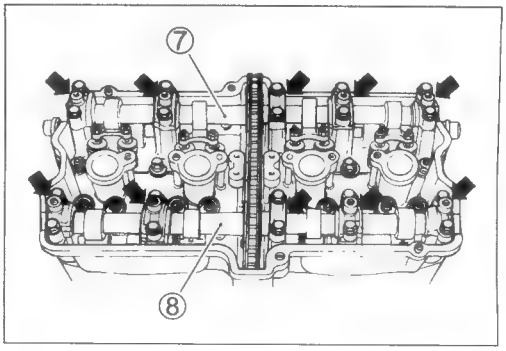

- Remove the cam chain guide ①.

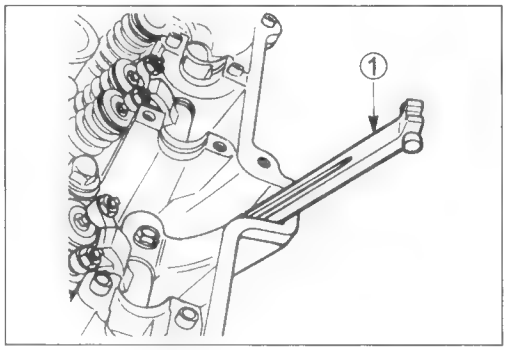

- Remove the cylinder head bolt ②.

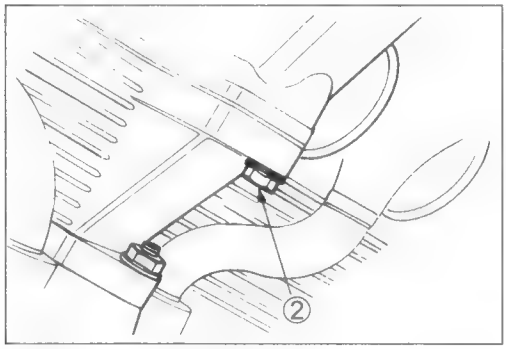

- The cylinder head can be removed when its twelve 10-mm nuts are removed.

NOTE:
When loosening the cylinder head nuts, loosen each nut little by little, in descending order, according to the numbers cast on the cylinder head.

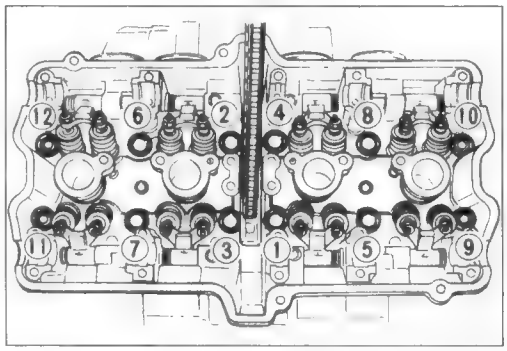

- Firmly grip the cylinder head at both ends and lift it straight up. If the cylinder head does not come off, lightly tap on the finless portions of it using a plastic mallet.

⚠ CAUTION

Be careful not to damage the fins when removing or handling the cylinder head.

NOTE:
See page 3-52 for cylinder head servicing.

- Remove the cylinder head gasket ③, O-rings ④ and dowel pins ⑤.

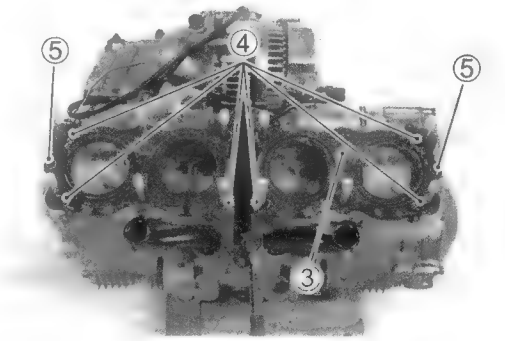

- Remove the left and right oil pipes ①.

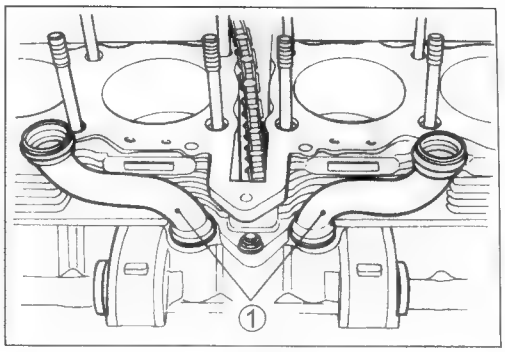

- Remove the cylinder base nut ②.

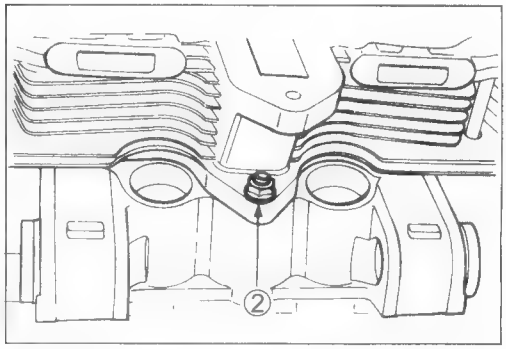

- Firmly grip the cylinder block at both ends and lift it straight up. If the cylinder block does not come off, lightly tap on the finless portions of it using a plastic mallet.

⚠ CAUTION

Be careful not to damage the fins when removing or handling the cylinder block.

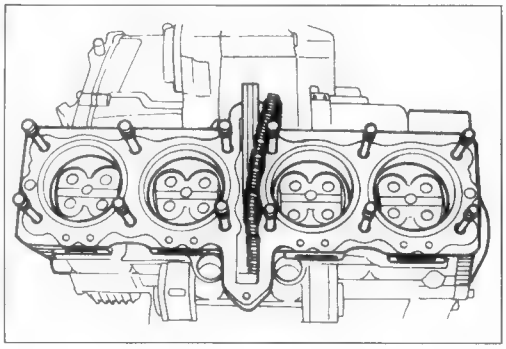

- Scribe the cylinder number on the head of the respective pistons.

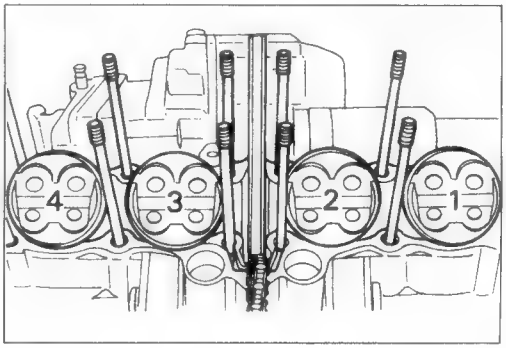

- Place a clean rag over the cylinder to prevent any parts from falling into the crankcase.
- Remove the piston pin circlip ③.
- Draw out each piston pin and remove the pistons.

NOTE:
See page 3-64 for piston and cylinder inspection.

- Remove the starter motor ①.

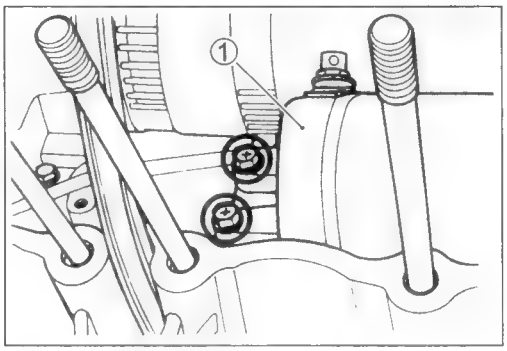

- Remove the generator ②.

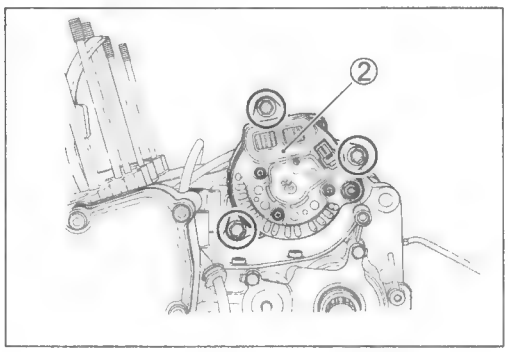

- Remove the signal generator rotor ③ using the special tool.

TOOL **09900-00410: Hexagon wrench set**

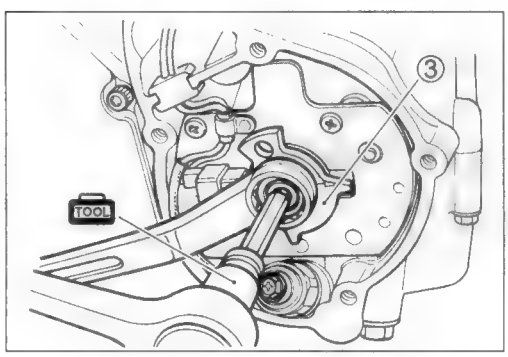

- Disconnect the oil pressure switch lead wire ④.
- Remove the signal generator stator (along with the pickup coil) ⑤ and oil pressure switch ⑥.

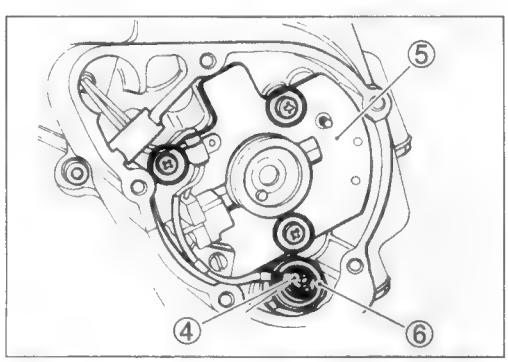

- Remove the clutch cover ⑦.

TOOL **09911-73730: 5 mm "T" type hexagon wrench**

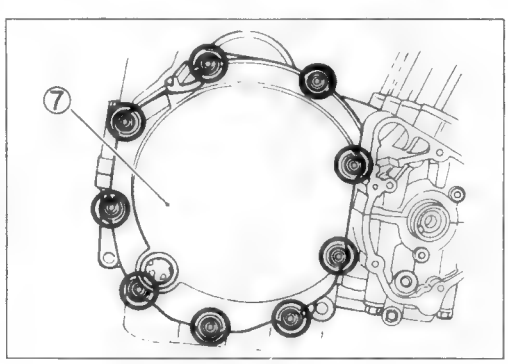

- Remove the starter clutch cover ①.

TOOL 09911-73730: 5 mm "T" type hexagon wrench

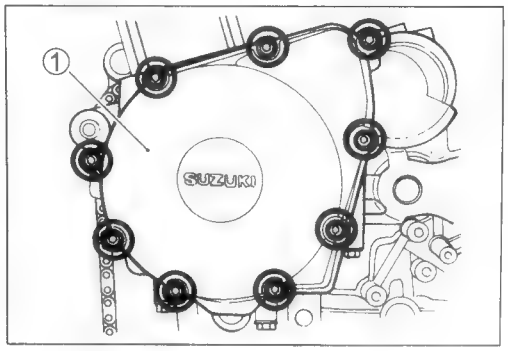

- Hold the starter clutch using the special tool and loosen the clutch spring set bolts in a crisscross pattern. Then, remove the bolts.

TOOL 09920-34810: Starter clutch holder

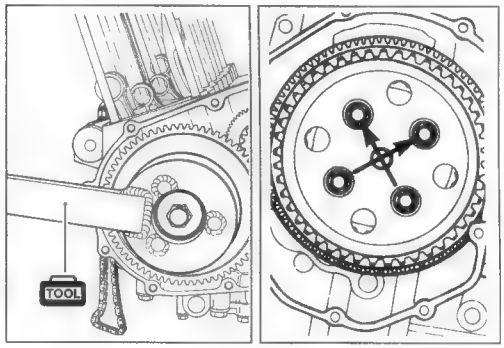

- Remove the clutch pressure plate ②, clutch drive plates and clutch driven plates.

NOTE:
See page 3-68 for the clutch plate inspection.

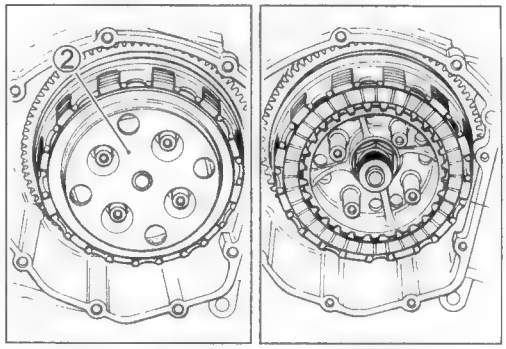

- Remove the thrust washer ③, clutch release bearing ④ and clutch push piece ⑤.

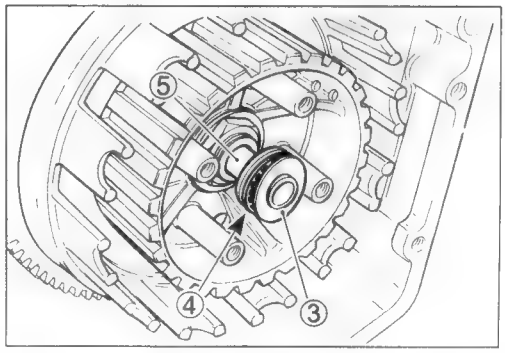

- Draw out the clutch push rods (⑥ and ⑦).

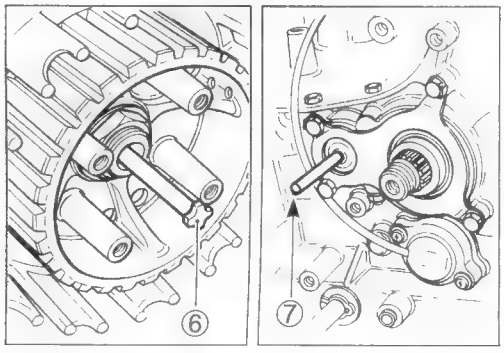

- Hold the clutch sleeve hub using the special tool and then remove the nut.

TOOL 09920-53740: Clutch sleeve hub holder

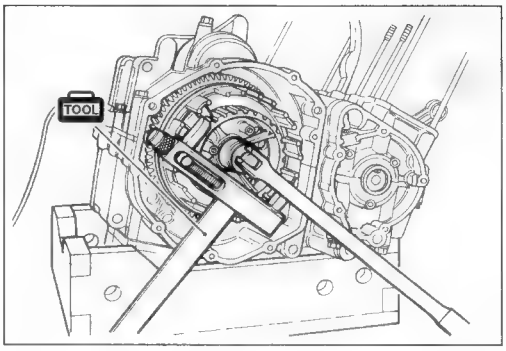

- Remove the washer ①, washer seat ② and clutch sleeve hub ③.

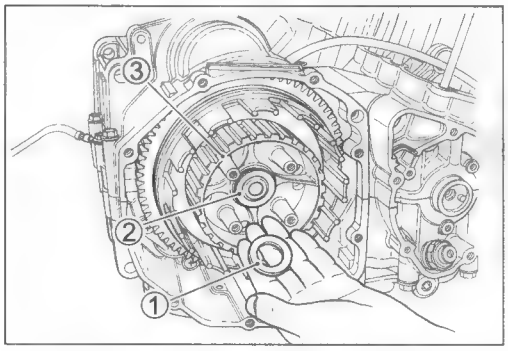

- Remove the thrust washer ④.

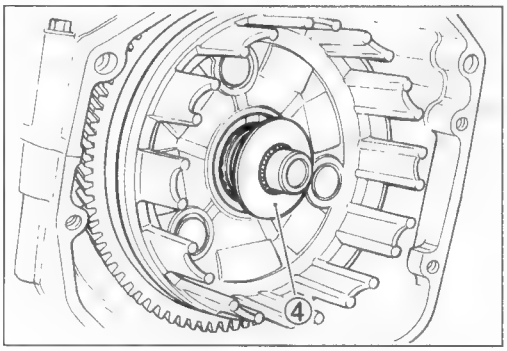

- With the spacer and bearing removed, the primary driven gear assembly can disengage from the primary drive gear.
- Remove the primary driven gear assembly along with the generator/oil pump drive gears.

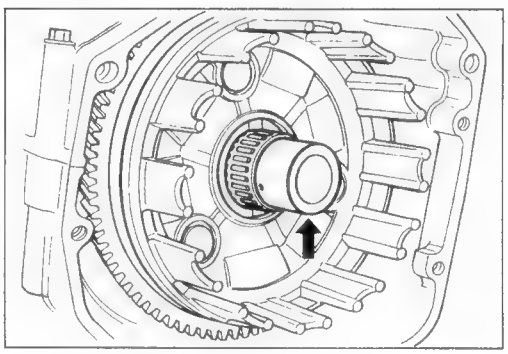

- Remove the thrust washer ⑤.

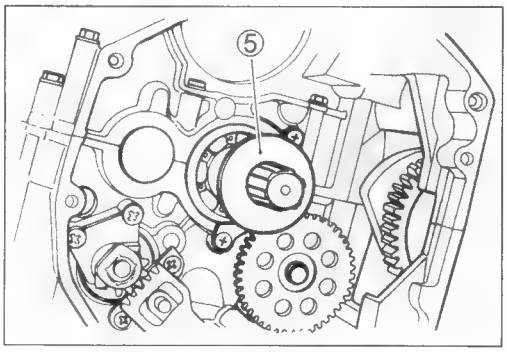

- Remove the circlip and washer from the gearshift shaft.

TOOL **09900-06107: Snap ring pliers**

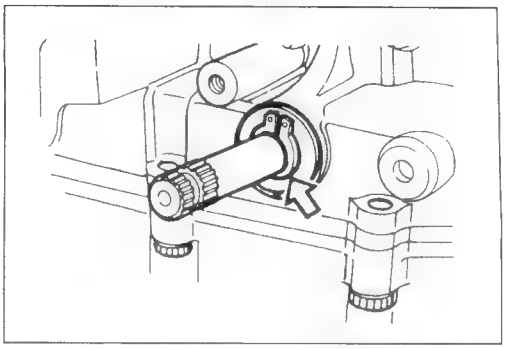

- Draw out the gearshift shaft ①, and then remove the gearshift cam driven gear ②.

TOOL **09900-09004: Impact driver set**

NOTE:
When removing the gearshift cam driven gear, do not lose the gearshifting pawl ③, pin ④ and spring ⑤.

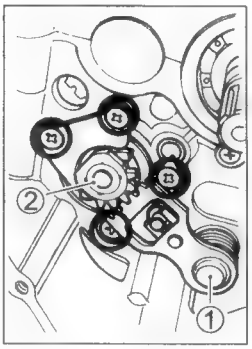

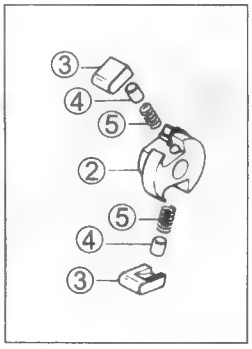

- Remove the circlip ⑥.

TOOL **09900-06107: Snap ring pliers**

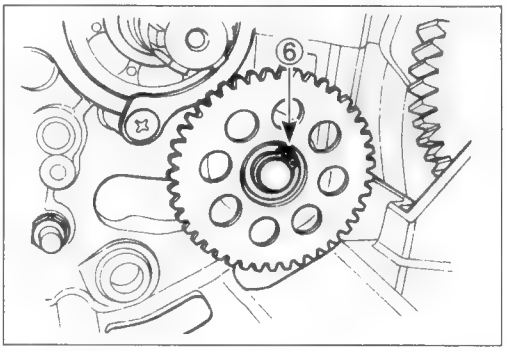

- Remove the washers ⑦, oil pump driven gear ⑧ and pin ⑨.

NOTE:
Do not lose the circlip, pin and the washers.

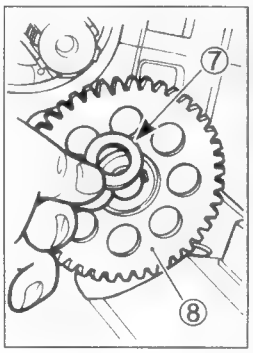

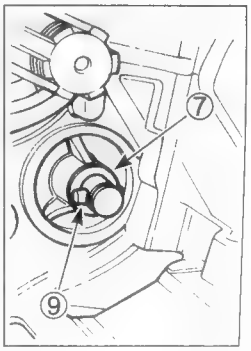

- Remove the starter idle gear ⑩ and its shaft ⑪.

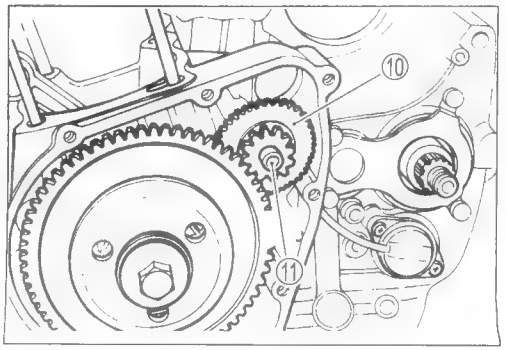

- Hold the starter clutch assembly using the special tool and then loosen the starter clutch mounting bolt.

TOOL 09920-34810: Starter clutch holder

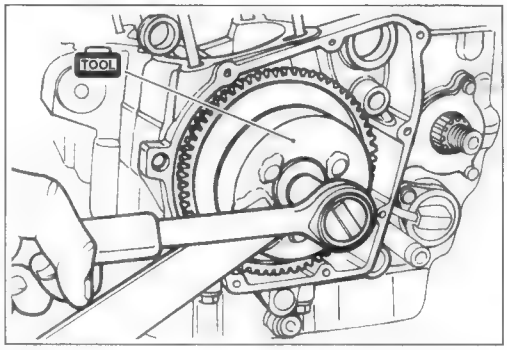

NOTE:
Do not remove the starter clutch mounting bolt at this stage, only loosen it. You will need to use it in conjunction with the special tool when removing the starter clutch assembly.

- Remove the starter clutch assembly ① from the crankshaft using the special tool.

TOOL 09930-33720: Rotor remover

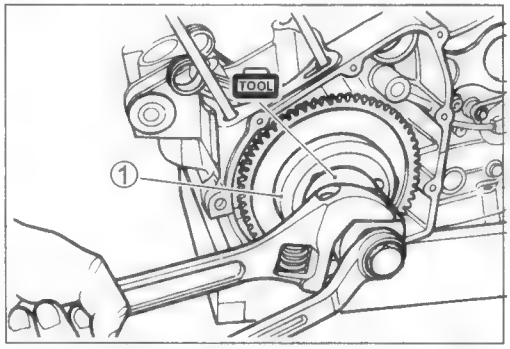

NOTE:
See page 3-69 for the starter clutch inspection.

- Flatten the tab on the oil seal retainer and then remove it ②.

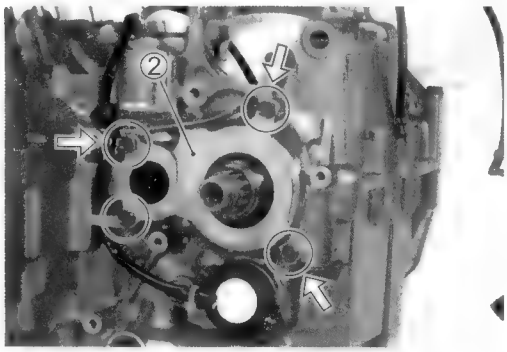

- Remove the gear position switch ③.

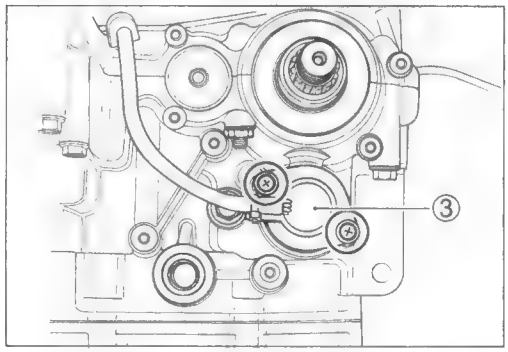

- Remove the O-ring ④, switch contact ⑤ and spring ⑥.

NOTE:
Do not lose the O-ring, switch contact and spring.

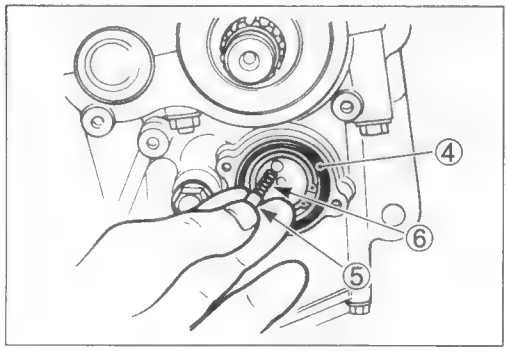

- Remove the countershaft bearing retainer ①.

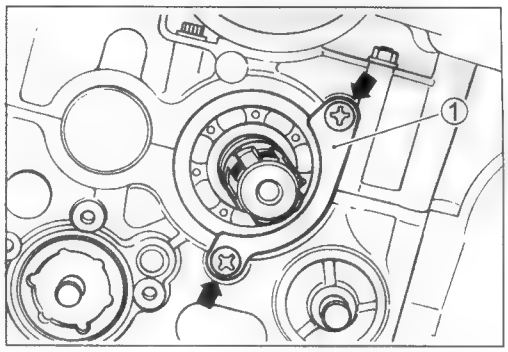

- Remove the upper crankcase bolts and nut.

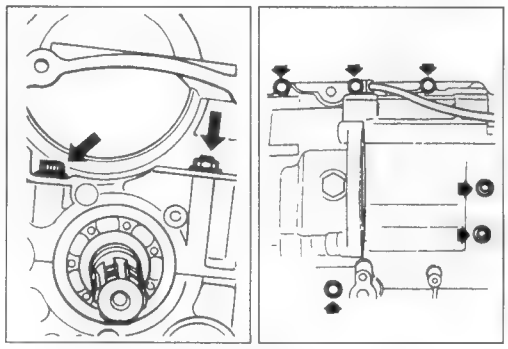

- Remove the oil pan ②.

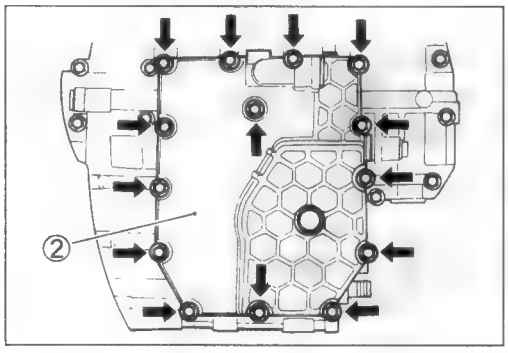

- Remove the shim ③ and O-ring ④.
- Remove the oil sump filter ⑤.
- Remove the oil return pipe ⑥.

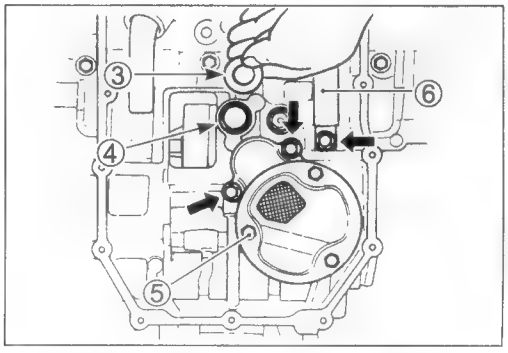

- Remove the lower crankcase bolts and nut.

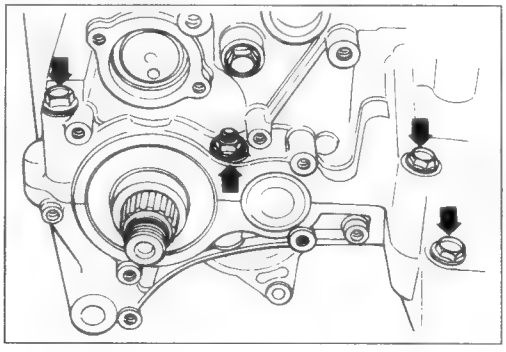

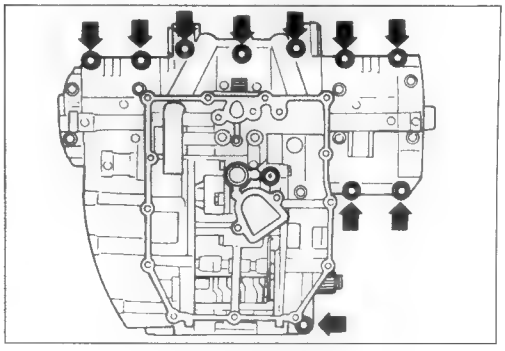

- Remove the main oil gallery plug ① and O-ring.

TOOL 09900-00410: Hexagon wrench set

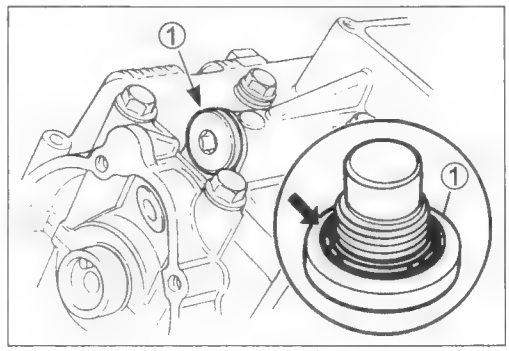

- Loosen the crankcase bolts in descending numerical order and then remove them.

NOTE:
Two allen bolts are located at position Ⓐ to tighten the crankshaft.

TOOL 09914-25811: 6 mm "T" type hexagon wrench

- Remove the oil return pipe Ⓑ.

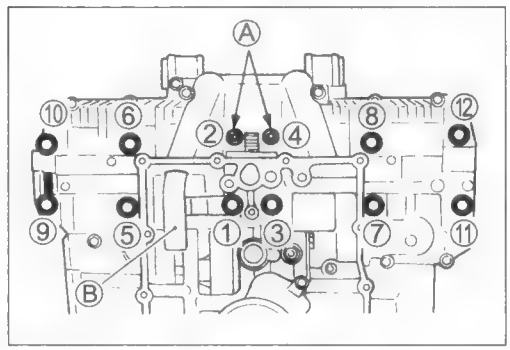

- Make sure that all of the bolts are removed. Then, tap the sides of the lower crankcase using a plastic mallet to separate the upper and lower crankcase halves and then lift the lower crankcase off of the upper crankcase.

⚠ CAUTION

Do not allow the crankshaft journal bearings to drop out of the lower crankcase.

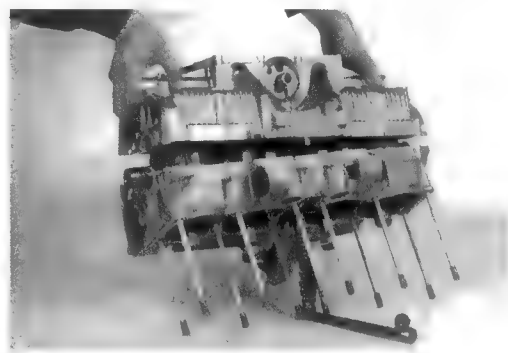

NOTE:
If it is difficult to separate the crankcase halves, set the proper bolt and nut to the crankcase by separating the upper and lower crankcase halves, as shown in the illustration.

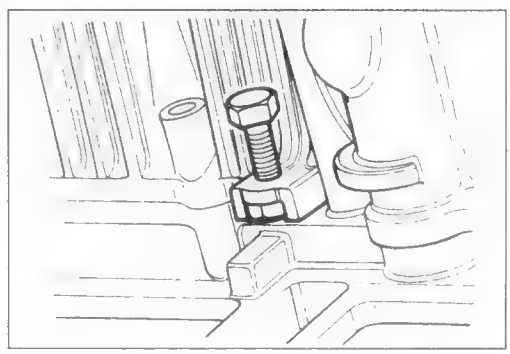

- Remove the crankshaft assembly ② from the upper crankcase.

NOTE:
* *The crankshaft thrust bearings ③ are located between the crankshaft assembly and upper crankcase.*
* *See page 3-79 for the crankshaft and conrod servicing.*

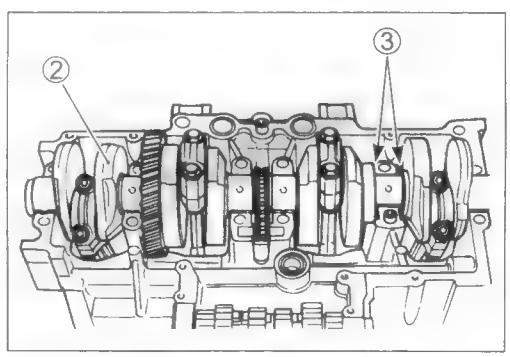

- Remove the dampers ① and cam chain tensioner guide ②.
- Remove the O-rings (③ and ④).

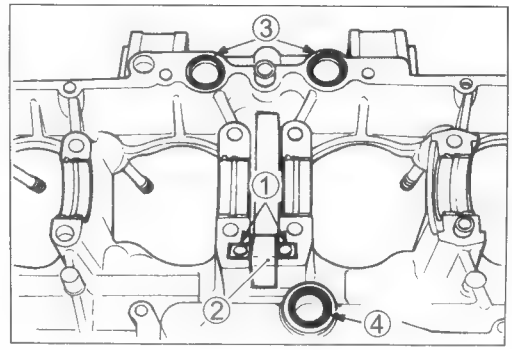

NOTE:

* *Do not remove the crankshaft journal bearings unless absolutely necessary.*

* *Make a note of where the crankshaft journal bearings are removed from so that they can be reinstalled in their original positions.*

⚠ CAUTION

When removing the crankshaft journal bearings, be careful not to scratch the crankcase and the crankshaft journal bearings.

- Remove the countershaft assembly ⑤ and driveshaft assembly ⑥.

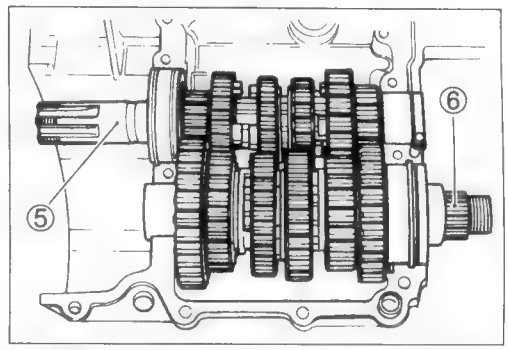

NOTE:

See page 3-73 for the countershaft and driveshaft servicing.

- Remove the C-rings ⑦ and bearing pins ⑧.

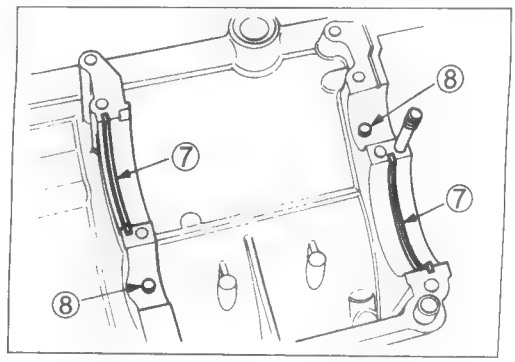

NOTE:

Do not lose the C-rings and bearing pins.

- Hold the gearshift forks ⑨ and draw out the gearshift fork shaft ⑩ from the lower crankcase.

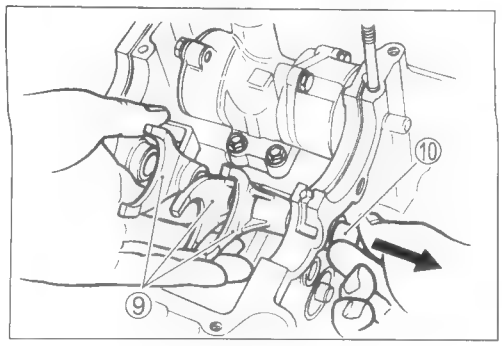

- Unhook the gearshift cam stopper spring ① from the lower crankcase.

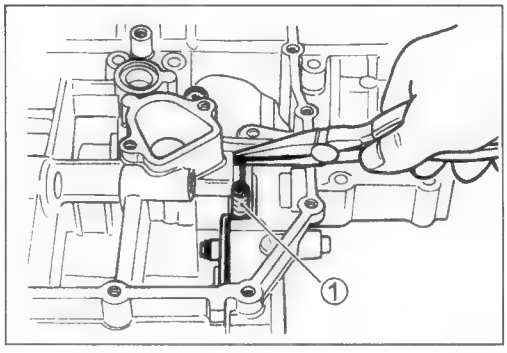

- Remove the circlip ② from the gearshift cam, then draw out the gearshift cam ③ from the opposite side.

TOOL **09900-06107: Snap ring pliers**

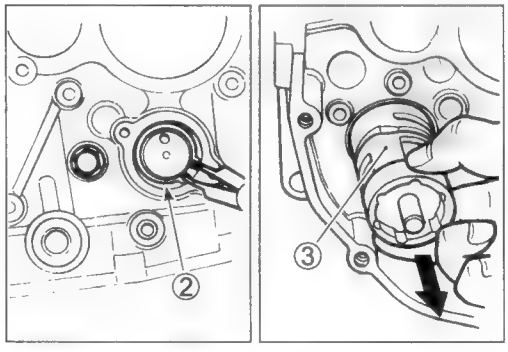

- Remove the circlip ④ and gearshift cam stopper ⑤.

TOOL **09900-06107: Snap ring pliers**

NOTE:
Rotate the bearing ⑥ in the crankcase by hand to inspect for abnormal noise and smooth rotation.
Replace the bearing if there is anything unusual.

TOOL **09900-06106: Snap ring pliers**

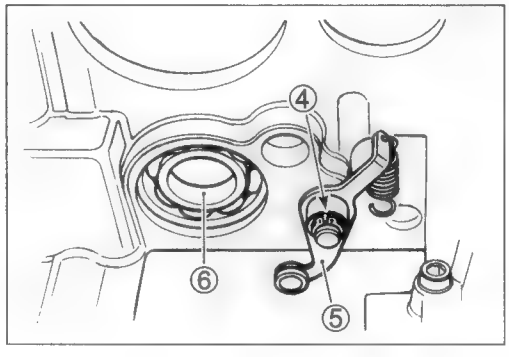

- Remove the gearshift cam stopper bolt ⑦.

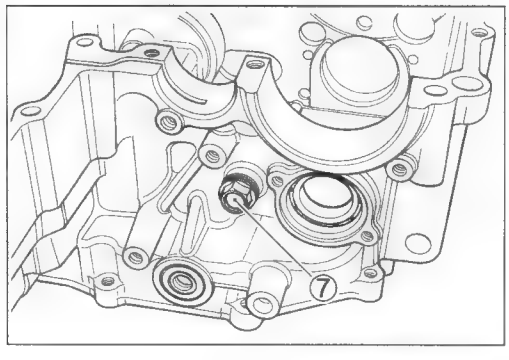

• Remove the oil pump ①.

TOOL **09900-00410: Hexagon wrench set**

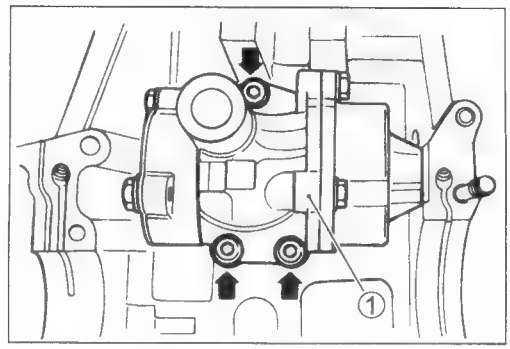

• Remove the O-rings and dowel pins.

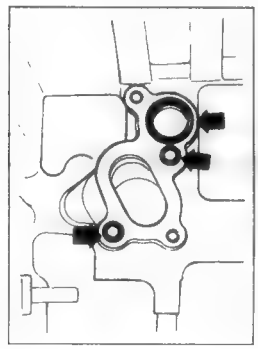

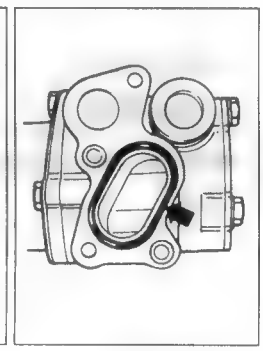

ENGINE REASSEMBLY

Reassemble the engine in the reverse order of disassembly. The following steps require special attention or precautionary measures should be taken.

NOTE:
Apply engine oil to each running and sliding part before reassembling.

- Install the O-rings (① and ②) and dowel pins ③ in the correct position as shown.

⚠ CAUTION

Replace the O-rings with new ones to prevent oil leakage.

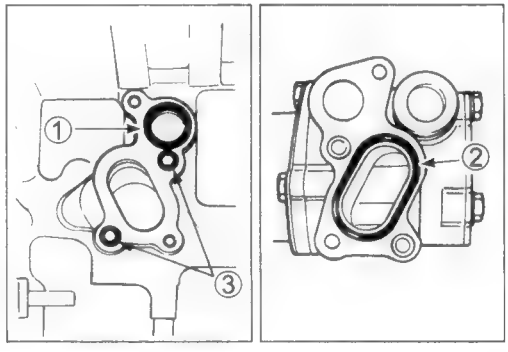

- Install the oil pump ④ into the lower crankcase with the three bolts and then tighten them to the specified torque.

NOTE:
Apply a small quantity of THREAD LOCK "1342" to the bolts.

1342 99000-32050: THREAD LOCK "1342"

Oil pump mounting bolt: 10 N·m (1.0 kgf·m, 7.0 lb-ft)

NOTE:
Make sure that the oil jets ⑤ in the lower crankcase are not clogged.

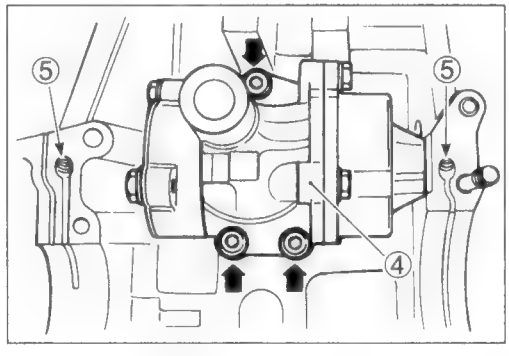

- Install the gearshift cam stopper bolt ⑥.

NOTE:
Before installing the gearshift cam stopper bolt ⑥, apply a small quantity of THREAD LOCK "1342" to it.

1342 99000-32050: THREAD LOCK "1342"

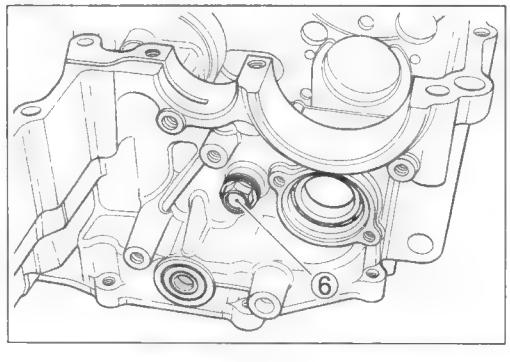

NOTE:
When installing the gearshift cam stopper plate ①, align the pin groove Ⓐ with the pin Ⓑ as shown.

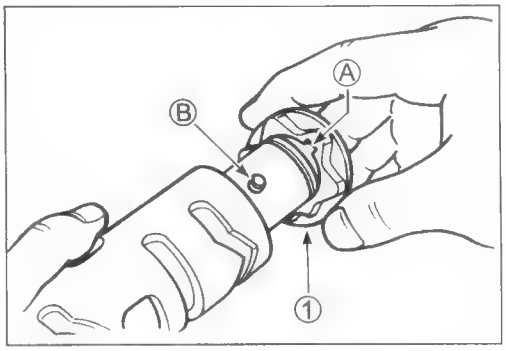

- Install the gearshift cam ② and its related parts.

③ Gearshift cam stopper
④ Circlip
⑤ Spring
⑥ Circlip

⚠ CAUTION

Always use new circlips (④ and ⑥).

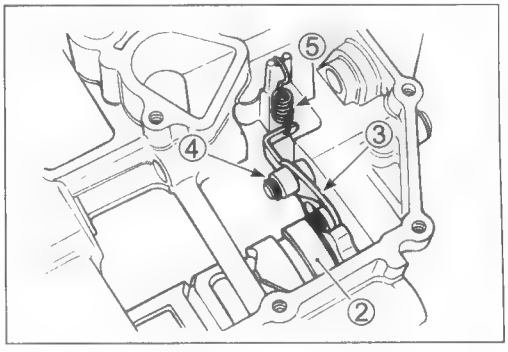

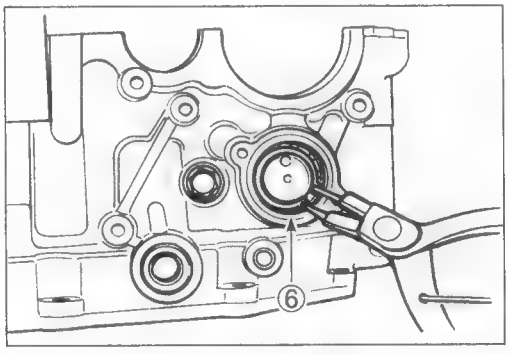

- Position the gearshift cam in the neutral position as shown. This will allow the gearshift forks and transmission gears to be installed easily.

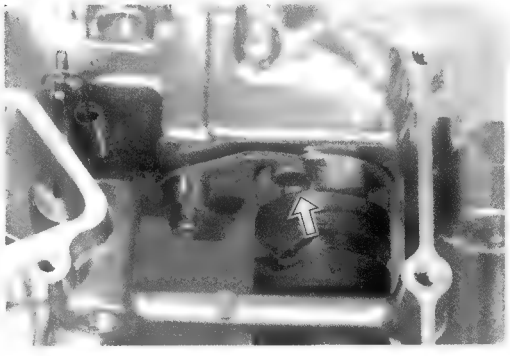

- Install the gearshift forks into the crankcase in the correct position and direction.

⑦ For the 6th (top) driven gear
⑧ For the 3rd/4th drive gear
⑨ For the 5th driven gear

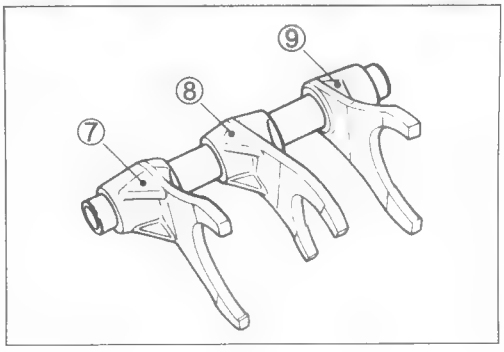

- Hold the gearshift forks ① by hand when installing the gearshift fork shaft ②.

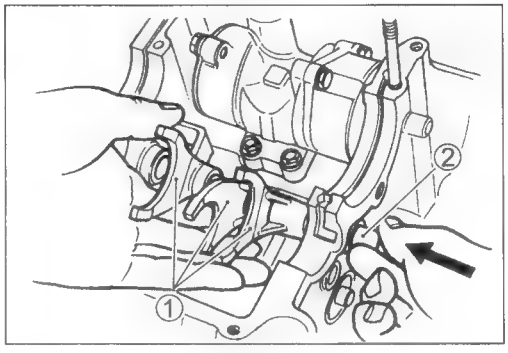

- Install the bearing pins ③ and C-rings ④ into the upper crankcase.

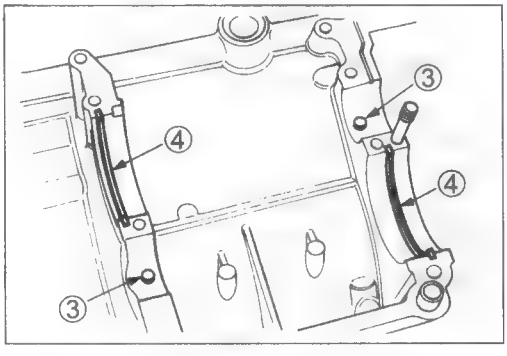

- Install the countershaft assembly ⑤ and driveshaft assembly ⑥ into the upper crankcase.

NOTE:

* *Be sure to install the bearing dowel pins ⑦ in their respective positions.*
* *Install the countershaft end cap in the proper position ⑧.*
* *Make sure that the countershaft assembly turns freely while holding the driveshaft assembly. If it does not turn freely, turn the gearshift cam to the neutral position.*

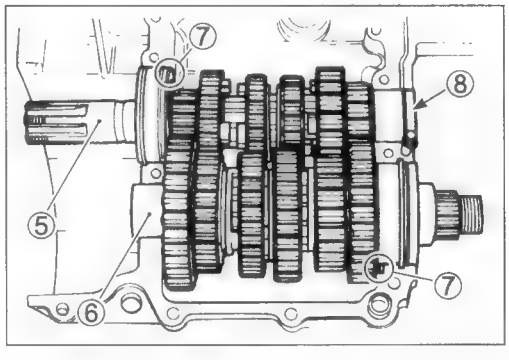

NOTE:

Before installing the crankshaft journal bearings, make sure that the oil jets ⑨ in the upper crankcase are not clogged.

⑨ Oil jet (4 pcs) ..... In the upper crankcase

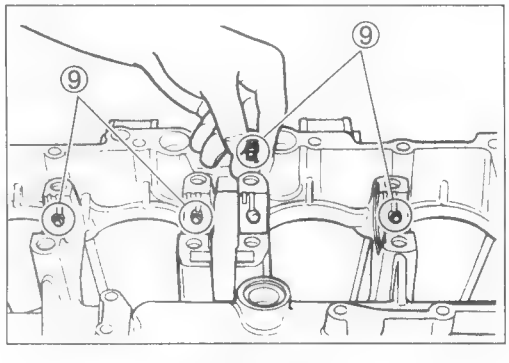

- When installing the crankshaft journal bearings into the upper and lower crankcases, be sure to install the tab ⑩ first, and then press in the opposite side of the bearing. (☞3-84)

⚠ CAUTION

Do not touch the bearing surfaces with your hands. Grasp the bearings by their edges.

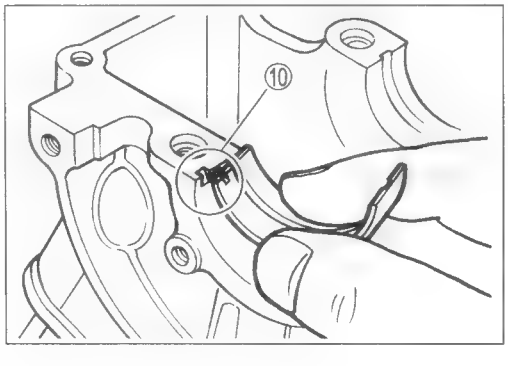

- Install the cam chain tensioner guide ① and the two dampers ② properly.

NOTE:
Be sure to face the arrow mark on the damper towards the front and rear, not towards the left and right.

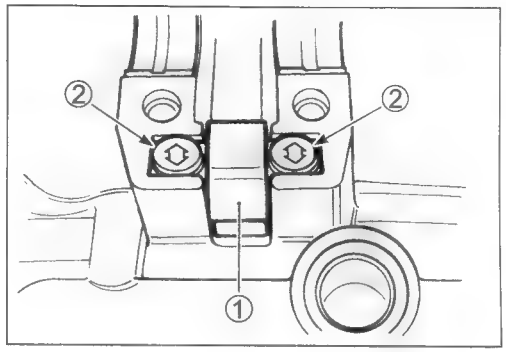

- Install the O-rings (③ and ④).

⚠ CAUTION

Replace the O-rings with new ones to prevent oil leakage.

- Before installing the crankshaft assembly, apply molybdenum oil solution to each crankshaft journal bearing.

99000-25140: SUZUKI MOLY PASTE

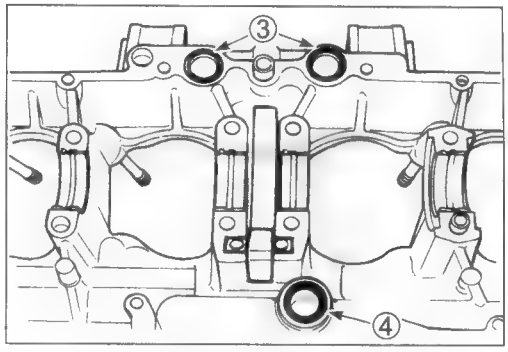

- Install the crankshaft assembly along with the cam chain into the upper crankcase.
- Insert the right-and left-thrust bearings ⑤ with the oil grooves facing towards the crankshaft web. (☞3-85)
- Clean the mating surfaces of the crankcases.
- Install the dowel pins in the upper crankcase.

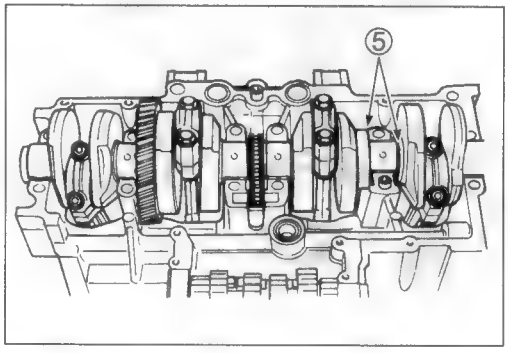

- Apply the recommended bond to the mating surface of the lower crankcase as follows.

1207B 99000-31140: SUZUKI BOND "1207B"

NOTE:
* *Make sure that the mating surfaces are free from moisture, oil, dust and other foreign materials.*
* *Apply the bond thinly and evenly and assemble the crankcases within a few minutes of application.*
* *Take extreme care not to apply any bond to the bearing surfaces.*

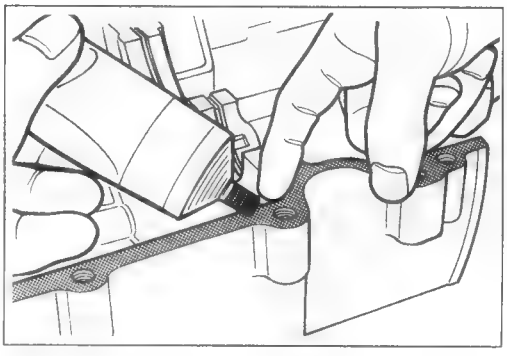

BOND "1207B" should be applied to the following locations.

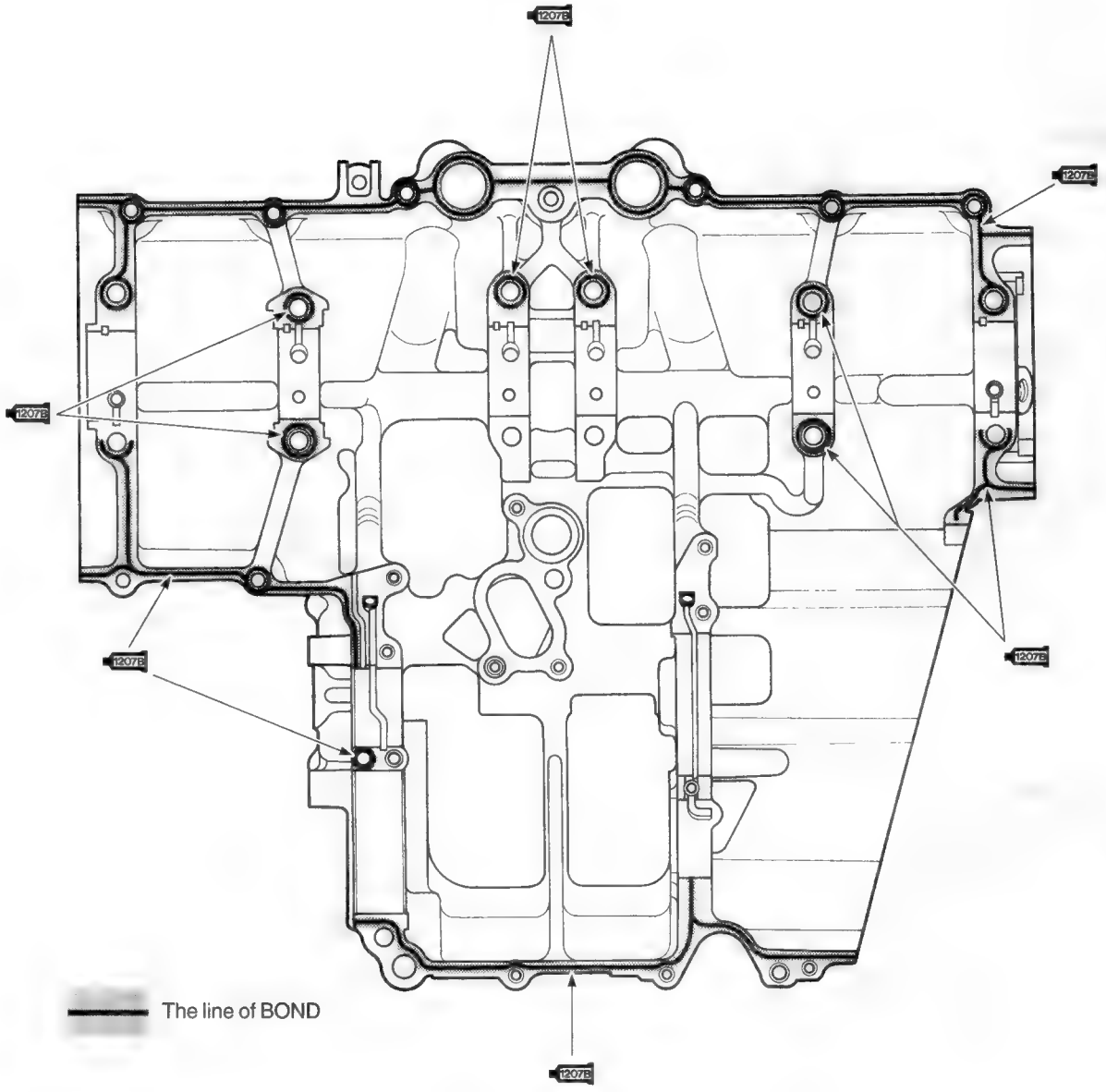

- Install the right oil pipe Ⓐ with the bolt ①.
- Install the copper washers onto bolts ⑨ and ⑪.
- Install the two allen bolts at position Ⓑ.
- Install the ten crankcase bolts (8 mm).
- Tighten the crankcase bolts (crankshaft tightening bolts) in ascending order. Tighten each bolt a little at a time to equalize the pressure.

Crankcase bolt (M8)
(Initial): 13 N·m (1.3 kgf·m, 9.5 lb-ft)
(Final) : 23 N·m (2.3 kgf·m, 16.5 lb-ft)

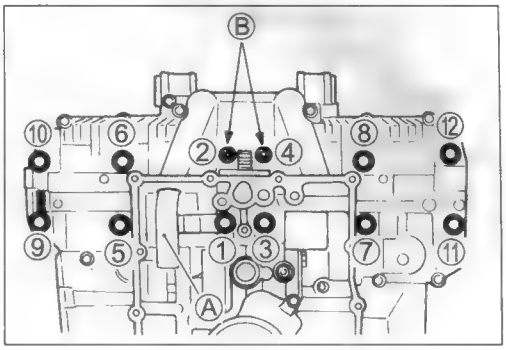

- Tighten the main oil gallery plug ① to the specified torque.

⚠ CAUTION

Replace the O-ring with a new one.

TOOL 09900-00410: Hexagon wrench set

Main oil gallery plug: 40 N·m (4.0 kgf·m, 29.0 lb-ft)

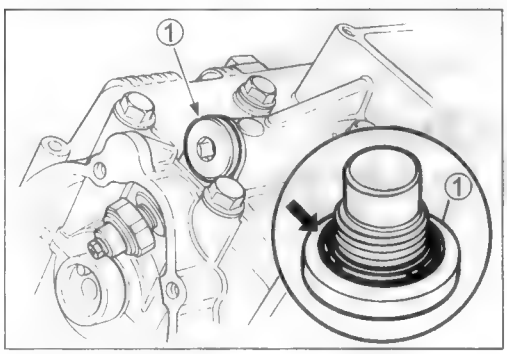

- Tighten the lower and upper crankcase bolts (6 mm) and nuts to the specified torque.

Crankcase bolt and nut (M6)
(Initial): 6 N·m (0.6 kgf·m, 4.5 lb-ft)
(Final) : 11 N·m (1.1 kgf·m, 8.0 lb-ft)

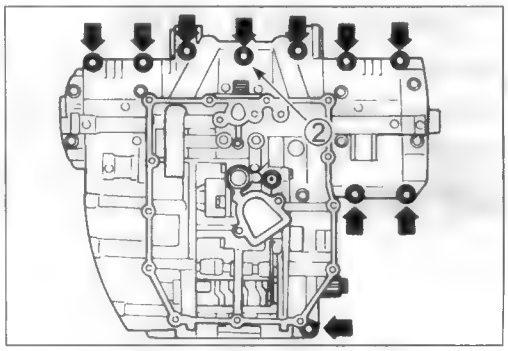

NOTE:
* *Install a new gasket washer at position ②.*
* *After tightening the upper crankcase bolt Ⓓ, install the plug Ⓒ.*
* *Install the engine ground wire ③ into the correct position as shown.*

⚠ CAUTION

Use a new gasket washer to prevent oil leakage.

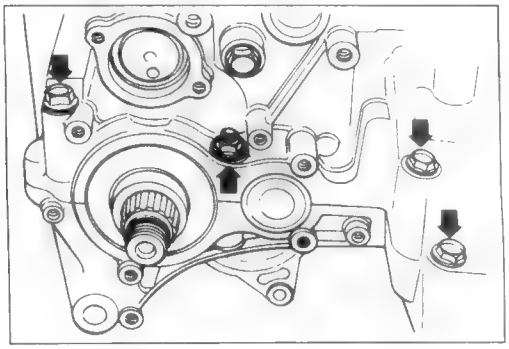

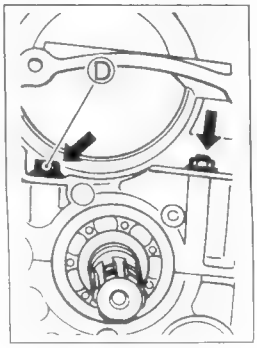

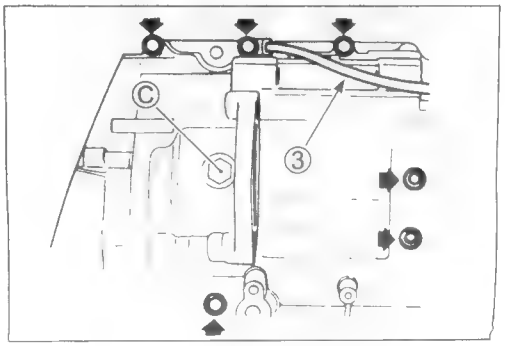

- Install the left oil pipe ①.
- Install a new O-ring ② and shim ③.
- Install a new gasket and the oil sump filter ④.

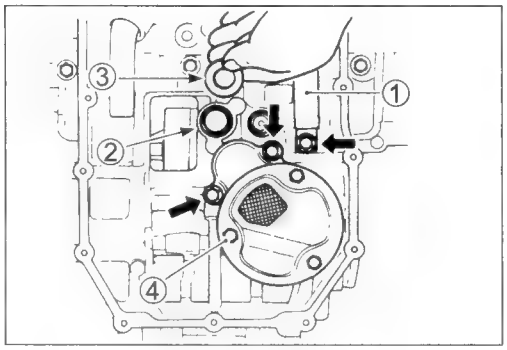

⚠ CAUTION

Replace the gasket and O-ring with new ones to prevent oil leakage.

- Install a new gasket and the oil pan. Tighten the oil pan bolts to the specified torque.

Oil pan bolt: 14 N·m (1.4 kgf·m, 10.0 lb-ft)

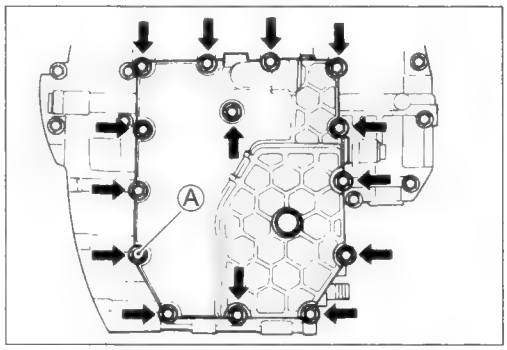

⚠ CAUTION

Replace the oil pan gasket with a new one to prevent oil leakage.

NOTE:
Install a new gasket washer to the oil pan bolt Ⓐ as shown.

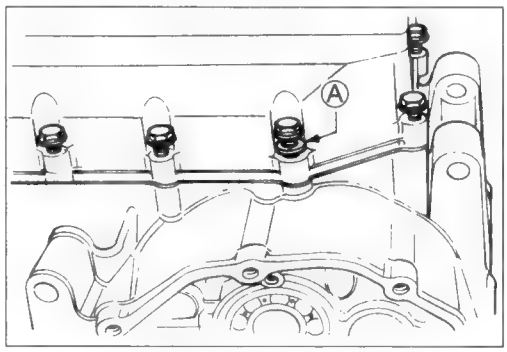

⚠ CAUTION

Use a new gasket washer to prevent oil leakage.

- Install the countershaft bearing retainer ⑤.

NOTE:
Apply a small quantity of THREAD LOCK "1342" to the two screws.

1342 99000-32050: THREAD LOCK "1342"

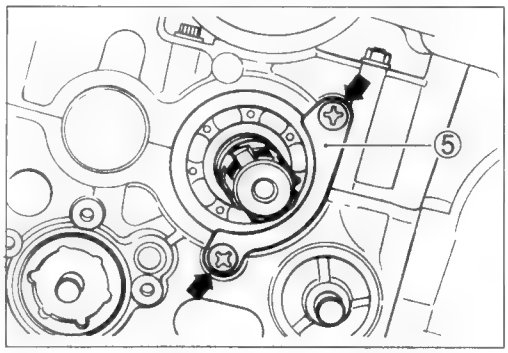

- Install the gear position switch.

NOTE:
When installing the gear position switch, be sure to install the spring ⑥, switch contact ⑦ and O-ring ⑧ properly.

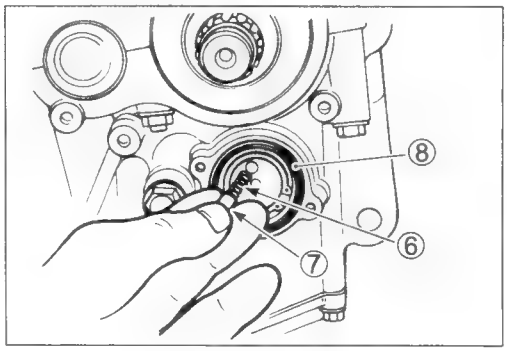

⚠ CAUTION

Replace the O-ring with a new one.

- Install the oil seal retainer ① with the four bolts and then bend the tab on the retainer.

NOTE:
Route the gear position switch lead wire to the inside of the oil seal retainer's tab Ⓐ as shown.

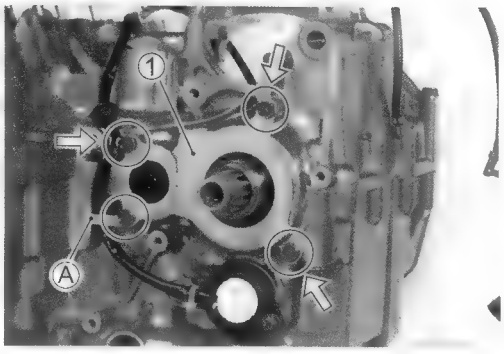

- Remove the grease from the tapered portion of the starter clutch and crankshaft. Use a nonflammable cleaning solvent to wipe off any oil or grease and make sure that the surfaces are completely dry.

NOTE:
Apply a small quantity of THREAD LOCK SUPER "1303" to the threads of the starter clutch mounting bolt.

1303 99000-32030: THREAD LOCK SUPER "1303"

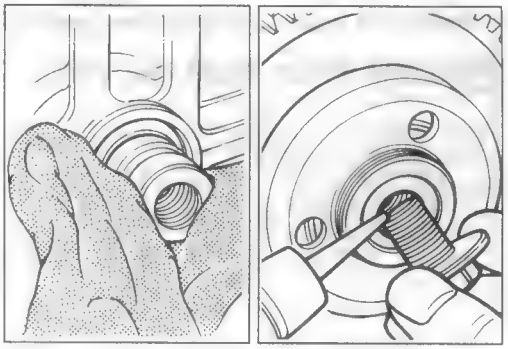

- Hold the starter clutch assembly using the special tool and then tighten the starter clutch mounting bolt to the specified torque.

TOOL 09920-34810: Starter clutch holder

Starter clutch mounting bolt:
150 N·m (15.0 kgf·m, 108.5 lb-ft)

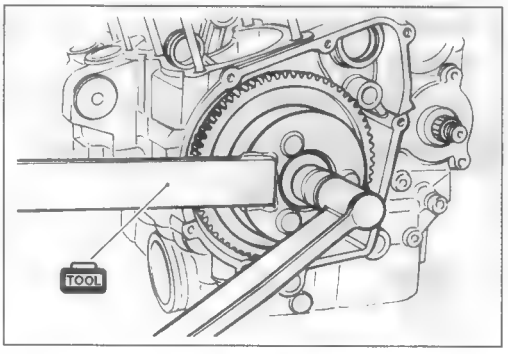

- Install the starter idle gear ② and its shaft ③.

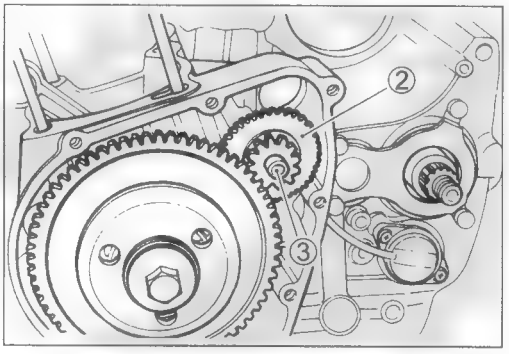

- Install each pawl ④ into the gearshift cam driven gear ⑤.
- The large shoulder Ⓑ must face to the outside.
- Install the cam guide ⑥ and pawl lifter ⑦.
- Apply a small quantity of THREAD LOCK "1342" to the screws.

TOOL 09900-09004: Impact driver set

1342 99000-32050: THREAD LOCK "1342"

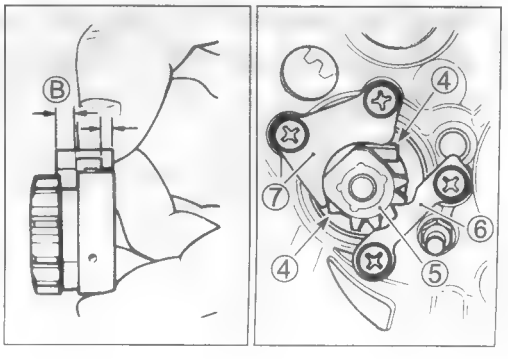

- Install the gearshift shaft ①.

NOTE:
Align the center teeth on the gearshift shaft with the center teeth on the gearshift cam driven gear.

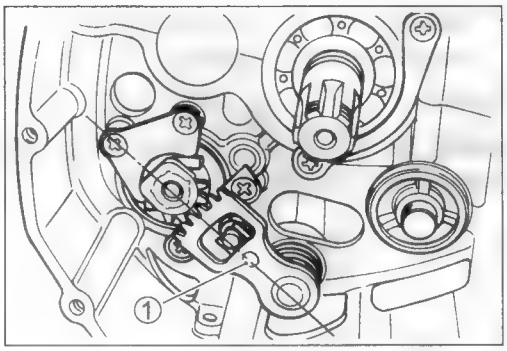

- Install the washer and fix the gearshift shaft with the circlip.

09900-06107: Snap ring pliers

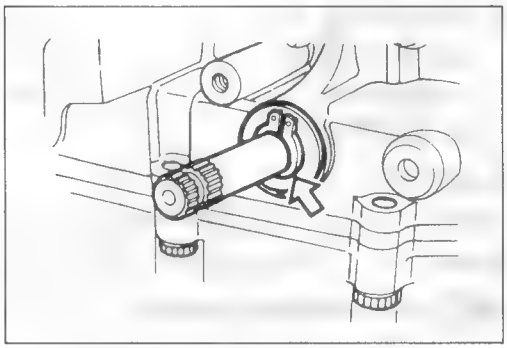

- Install the washer ②, pin ③, oil pump driven gear ④ and washer ⑤.
- Fix the oil pump driven gear with the circlip.

09900-06107: Snap ring pliers

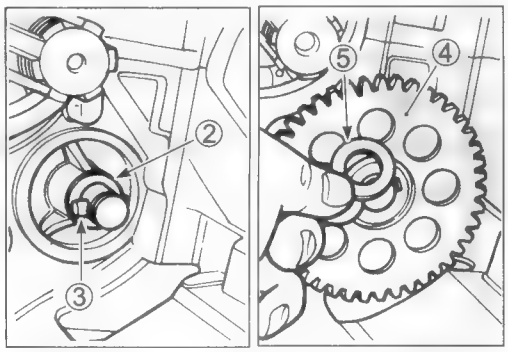

- Install the thrust washer ⑥ onto the countershaft.

NOTE:
The flat surface of the thrust washer should face out.

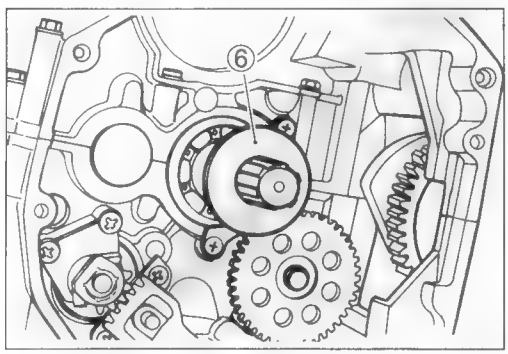

- Install the generator/oil pump drive gears ⑦ onto the primary driven gear assembly ⑧ as shown.

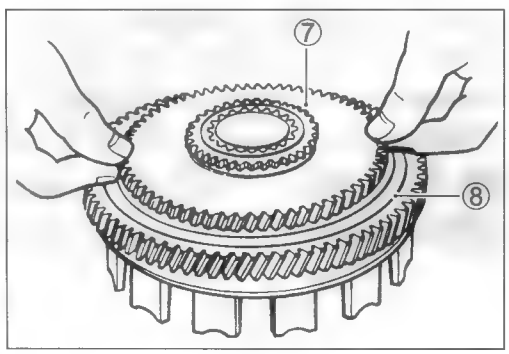

- Install the primary driven gear assembly onto the countershaft, and apply engine oil onto the needle bearing ① and spacer ②.
- Install the thrust washer ③ onto the countershaft.

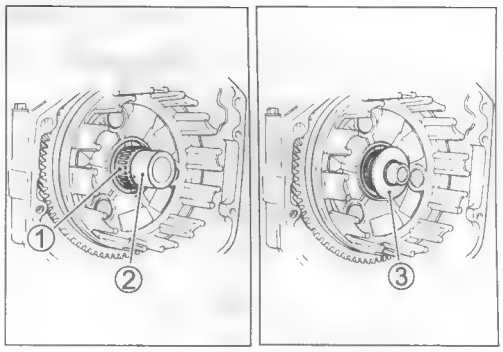

- Install the clutch sleeve hub onto the countershaft.
- Install the washer seat ④, washer ⑤ and clutch sleeve hub nut ⑥ as shown.

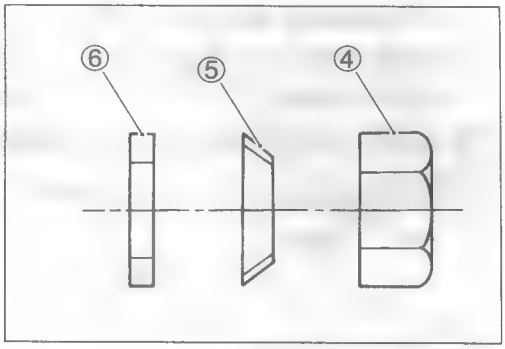

- Tighten the clutch sleeve hub nut to the specified torque.

TOOL 09920-53740: Clutch sleeve hub holder

Clutch sleeve hub nut: 95 N·m (9.5 kgf·m, 68.5 lb-ft)

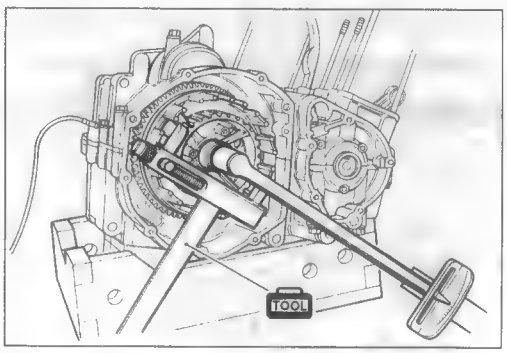

- Insert the clutch drive plates and driven plates one by one into the clutch sleeve hub in the prescribed order, drive plate first.

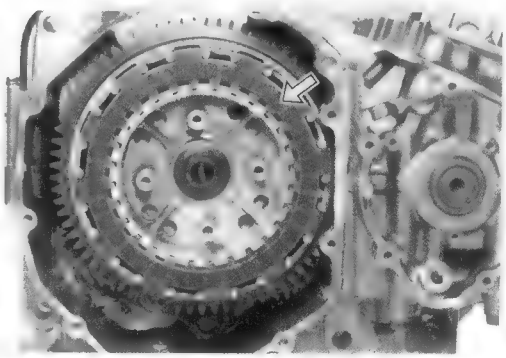

- Install the clutch push rods (⑥ and ⑦).

NOTE:
Apply SUZUKI SUPER GREASE "A" to the clutch push rod ⑦ when installing it.

99000-25010: SUZUKI SUPER GREASE "A"

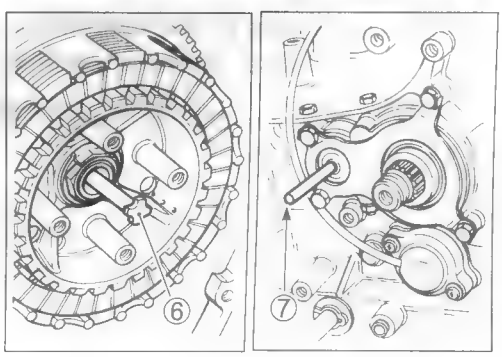

- Install the clutch push piece ①, clutch release bearing ② and thrust washer ③ onto the countershaft.

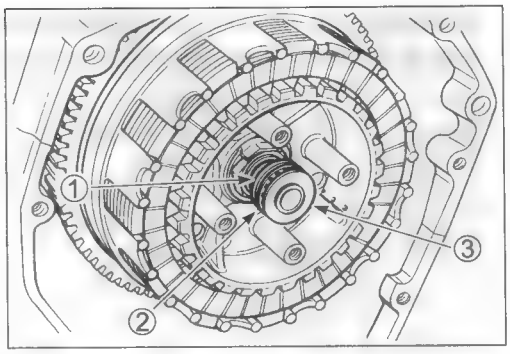

- Hold the starter clutch using the special tool, install the clutch pressure plate, and then tighten the clutch spring set bolts in a crisscross pattern to the specified torque.

TOOL 09920-34810: Starter clutch holder

Clutch spring set bolt: 12 N·m (1.2 kgf·m, 8.5 lb-ft)

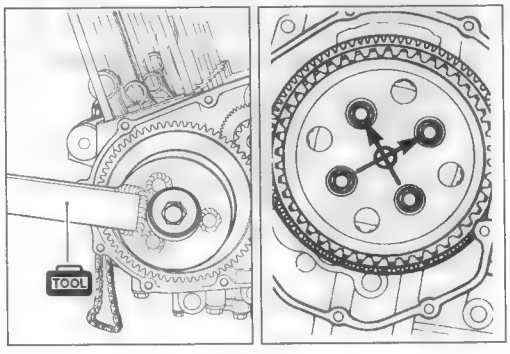

- Apply a light coat of the recommended bond to the clutch cover gasket mating surface Ⓐ as shown.

1207B 99000-31140: SUZUKI BOND "1207B"

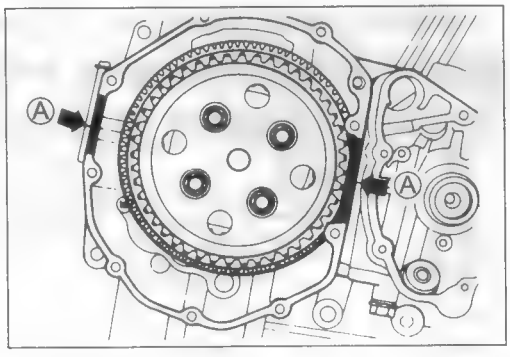

- Install the dowel pins, a new gasket and the clutch cover.
- Tighten the clutch cover bolts securely.

NOTE:
Install the two gasket washers onto the clutch cover bolts Ⓑ as shown.

⚠ CAUTION

Use only new gasket washers to prevent oil leakage.

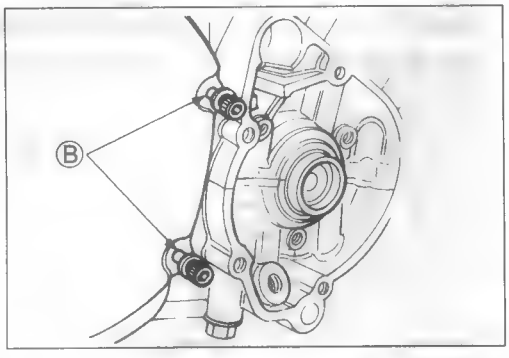

- Apply a light coat of the recommended bond to the starter clutch cover gasket mating surface Ⓒ as shown.

1207B 99000-31140: SUZUKI BOND "1207B"

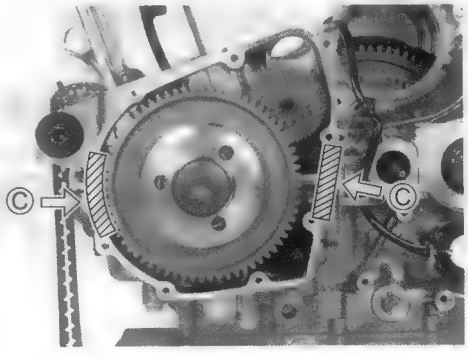

- Install the dowel pin, a new gasket and the starter clutch cover, and tighten the cover bolts securely.

NOTE:
Install the gasket washer to the starter clutch cover bolt Ⓐ as shown.

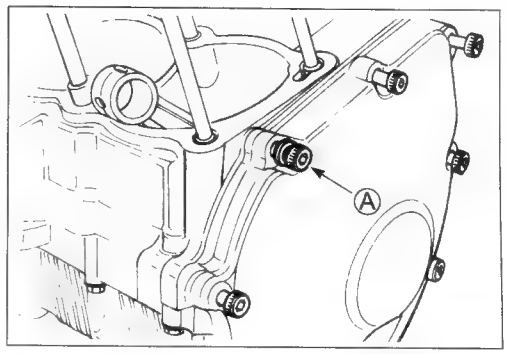

⚠ CAUTION

Use a new gasket washer to prevent oil leakage.

- Install the oil pressure switch, apply the recommended bond to its thread and tighten it to the specified torque.

1207B 99000-31140: SUZUKI BOND "1207B"

Oil pressure switch: 14 N·m (1.4 kgf·m, 10.0 lb-ft)

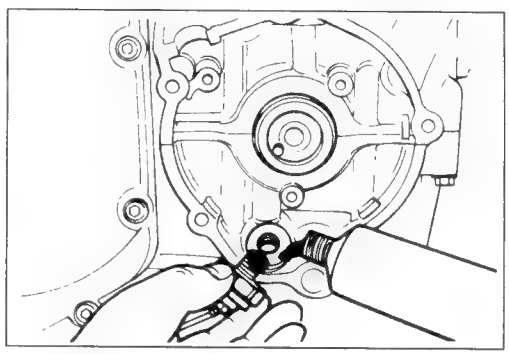

- Install the signal generator stator (along with the pickup coil) ①.
- Be sure to fit the slot Ⓑ on the back surface of the signal generator rotor over the locating pin ② on the end of crankshaft.

NOTE:
The recommended bond should be applied to the groove of the signal generator lead wire grommet Ⓒ.

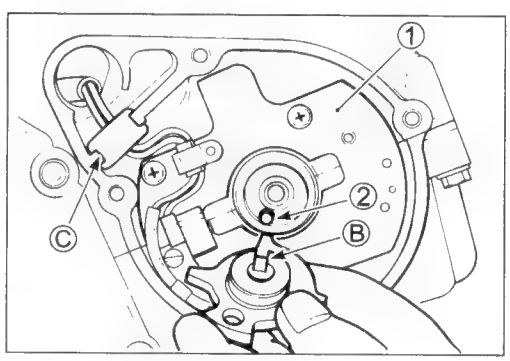

1207B 99000-31140: SUZUKI BOND "1207B"

- Hold the nut and tighten the signal generator rotor bolt to the specified torque.

TOOL 09900-00410: Hexagon wrench set

Signal generator rotor bolt: 25 N·m (2.5 kgf·m, 18.0 lb-ft)

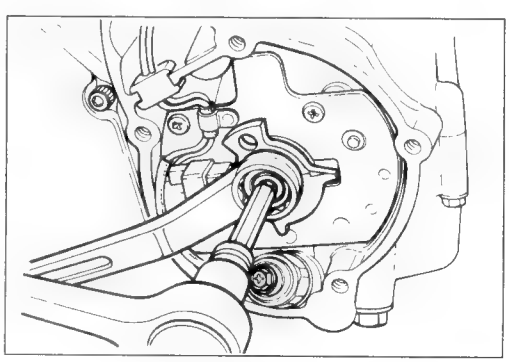

- Connect the oil pressure switch lead wire.
- Pass the signal generator lead wire through the upper crankcase as shown.

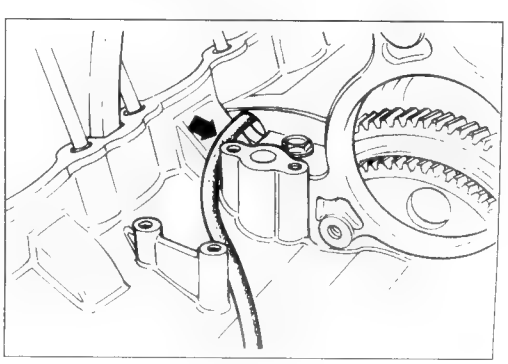

• Install the generator ①.

Generator mounting bolt: 25 N·m (2.5 kgf·m, 18.0 lb-ft)

NOTE:
Apply SUZUKI SUPER GREASE "A" to the generator O-ring.

99000-25010: SUZUKI SUPER GREASE "A"

⚠ CAUTION

Replace the O-ring with a new one.

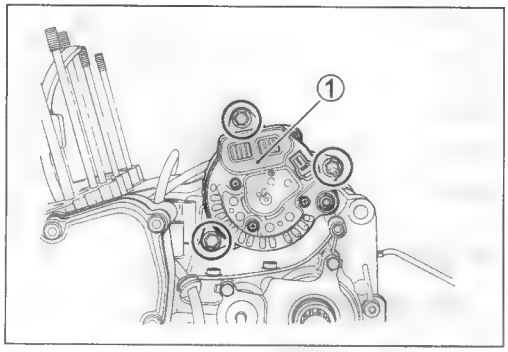

• Install the starter motor ②.

Starter motor mounting bolt: 6 N·m (0.6 kgf·m, 4.5 lb-ft)

NOTE:
* *Apply SUZUKI SUPER GREASE "A" to the starter motor O-ring.*
* *Apply a small quantity of THREAD LOCK "1342" to the two bolts.*

1342 99000-32050: THREAD LOCK "1342"

99000-25010: SUZUKI SUPER GREASE "A"

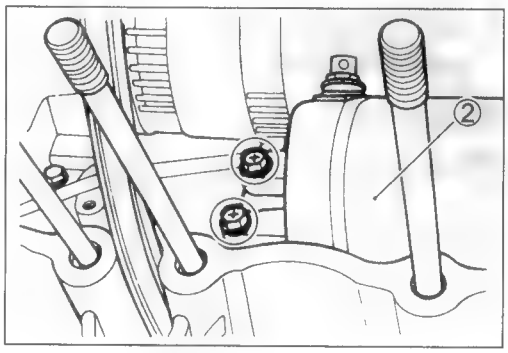

CYLINDER BLOCK STUD BOLT LOCATION

Item No.	Length
① ③ ⑤ ⑦ ⑨ ⑩ ⑪ ⑫	175 mm (6.89 in)
② ④ ⑥ ⑧	168 mm (6.61 in)

Ⓐ Exhaust side

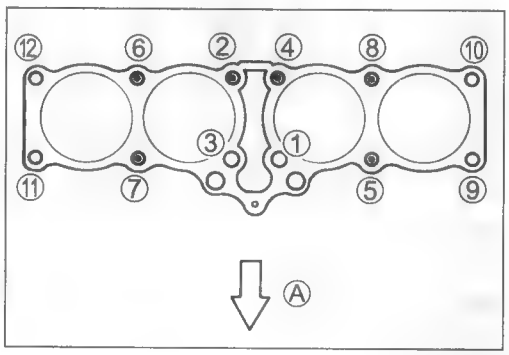

NOTE:
Before installing the cylindar block stud bolt ⑦, apply a light coat of the recommended bond to its threads.

1207B 99000-31140: SUZUKI BOND "1207B"

Cylinder block stud bolt: 15 N·m (1.5 kgf·m, 11.0 lb-ft)

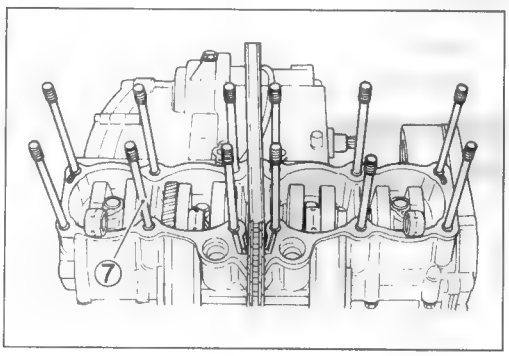

- Make sure that the oil jets ① in the upper crankcase are not clogged.

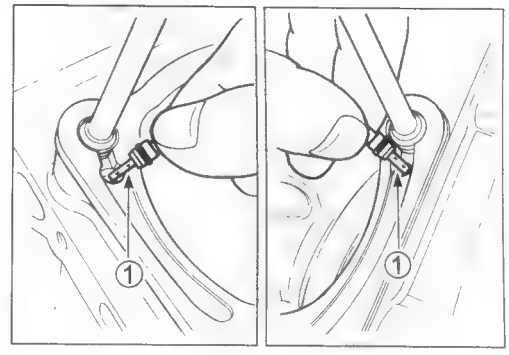

- Install the pistons and piston pins in their original cylinders. Refer to the scribe marks on each piston.
- Before installing the piston pins, apply molybdenum oil solution to their surfaces.

99000-25140: SUZUKI MOLY PASTE

- Place a cloth beneath the piston, and install the circlips ②.

NOTE:

* *Install the pistons with the arrow mark Ⓐ facing towards the exhaust side.*

* *Be sure to use new circlips.*

- Install the dowel pins and the new cylinder gasket.
- Before installing the cylinder block, oil the big and small ends of each conrod and also the sliding surface of each piston.

NOTE:

Install the gasket with the "UP" mark facing up as shown.

⚠ CAUTION

Use a new gasket to prevent oil leakage.

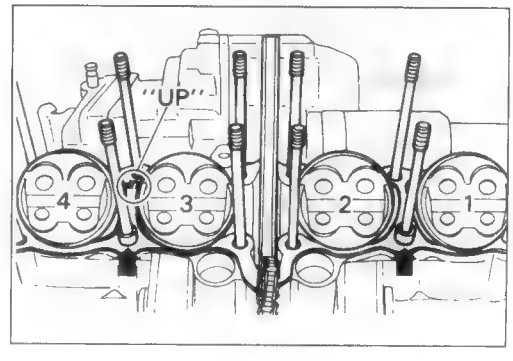

- Position the piston ring gaps as shown. Before inserting each piston into its cylinder, check that the gaps are properly positioned.

Ⓐ Exhaust side
Ⓑ Intake side
① 2nd ring and lower side rail
② Upper side rail
③ 1st ring and spacer

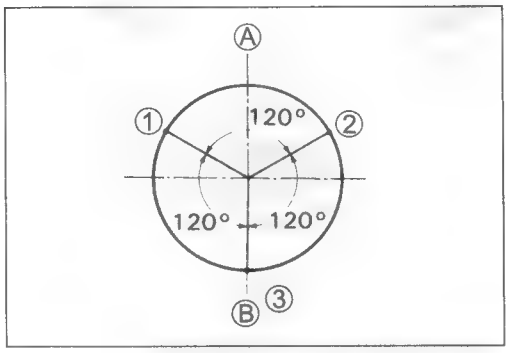

- Install each special tool as shown. Some light resistance must be overcome to lower the cylinder block over the pistons.
- With pistons #2 and #3 in place, install pistons #1 and #4, and then insert them into the respective cylinders.

TOOL 09916-74521: Holder body
09916-74530: Band (bore 55 – 65 mm)

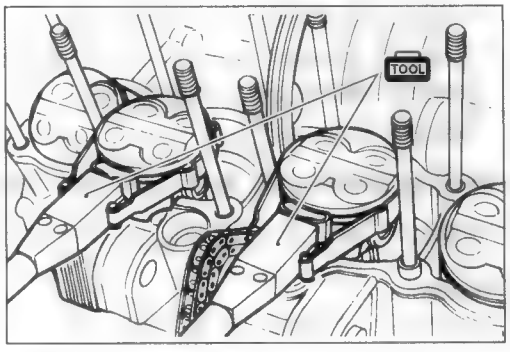

NOTE:
Do not overtighten the bands or piston installation into the cylinders will be difficult.

- Tighten the cylinder base nut ④ to the specified torque.

Cylinder base nut: 9 N·m (0.9 kgf·m, 6.5 lb-ft)

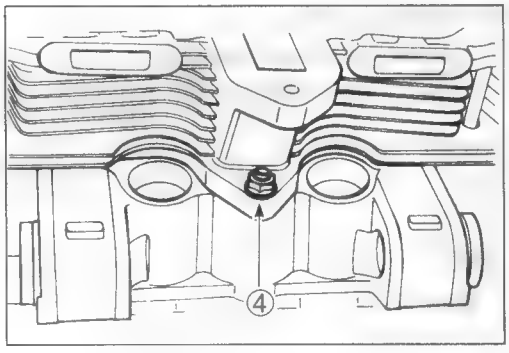

- Install the O-rings, dowel pins and the new cylinder head gasket.

NOTE:
Install the gasket with the "UP" mark facing up as shown.

⚠ CAUTION

Replace the O-rings and gasket with new ones to prevent oil leakage.

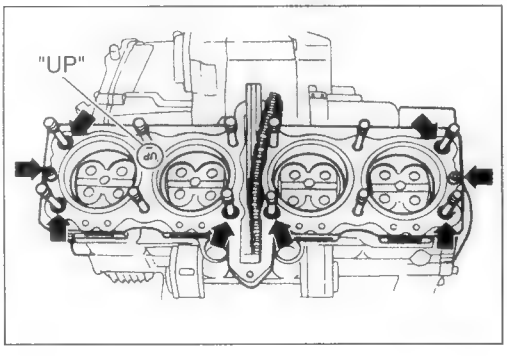

- Install the new O-rings ① onto the oil pipes and apply SUZUKI SUPER GREASE "A" to the O-rings.
- Install the right and left oil pipes.

⚠ CAUTION

Replace the O-rings ① with new ones to prevent oil leakage.

99000-25010: SUZUKI SUPER GREASE "A"

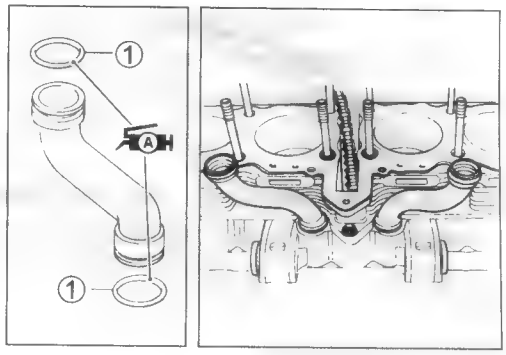

- Place the cylinder head onto the cylinder block.
- Cylinder head nuts and washers must be installed in the correct position as shown.

Ⓐ Copper washer with cap nut (8 pcs)
Ⓑ Steel washer with normal nut (4 pcs)

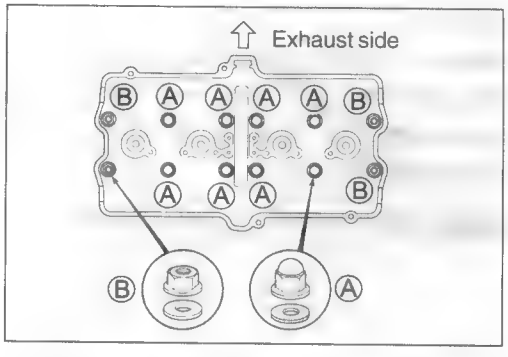

- Tighten the twelve 10-mm nuts in ascending order and to the specified torque.

Cylinder head nut: 38 N·m (3.8 kgf·m, 27.5 lb-ft)

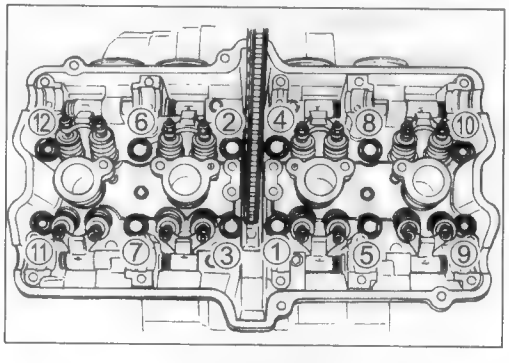

- After firmly tightening the twelve 10-mm nuts, install the cylinder head bolt (6 mm) ② and tighten it to the specified torque.

Cylinder head bolt: 10 N·m (1.0 kgf·m, 7.0 lb-ft)

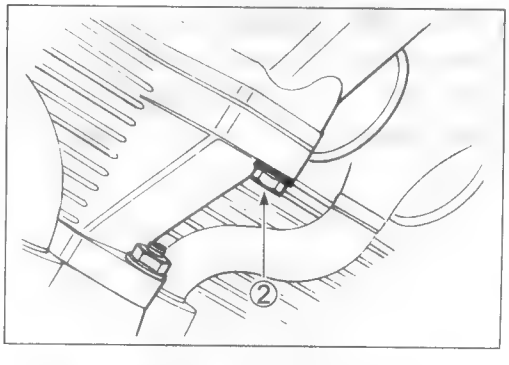

- Install the cam chain guide ③ as shown.

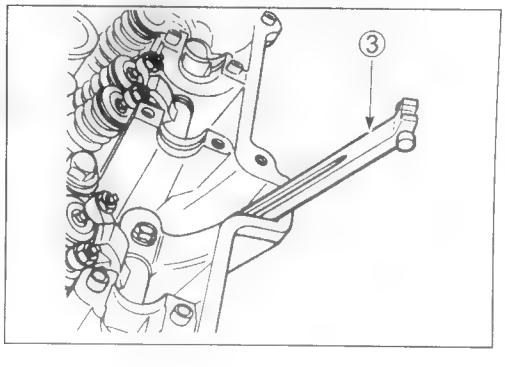

- While holding down the cam chain, rotate the crankshaft clockwise and align the "T" mark on the signal generator rotor with the center of the pickup coil.

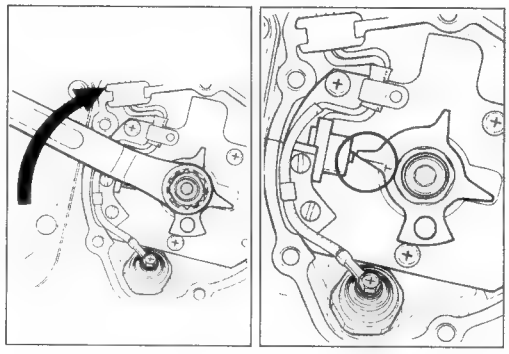

⚠ CAUTION

Turn the crankshaft using a 19 mm wrench. Never rotate the crankshaft using a 6-mm T-type wrench.

NOTE:
Before installing the camshafts onto the cylinder head, apply SUZUKI MOLY PASTE onto the camshaft journals Ⓐ and do not leave any dry spots. Also, apply engine oil onto the camshaft journal holders.

99000-25140: SUZUKI MOLY PASTE

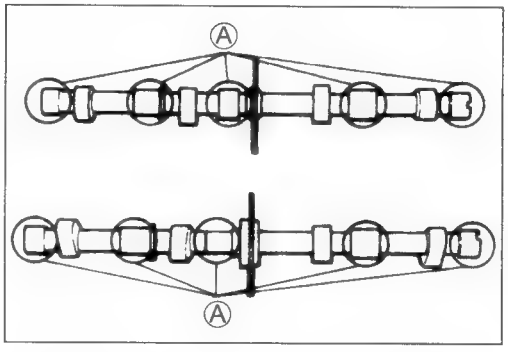

- The exhaust camshaft has the embossed letters "EX" and the intake camshaft has the embossed letters "IN". Also, the right end of each camshaft has a notch Ⓑ.

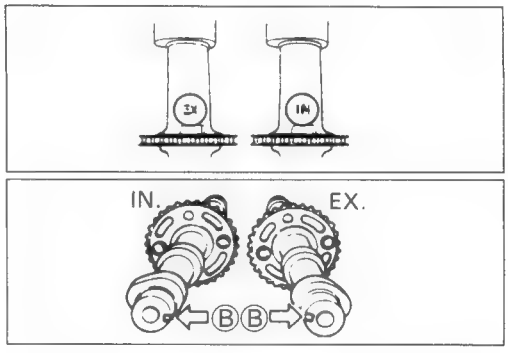

- When the "T" mark on the signal generator rotor is aligned with the center of the pickup coil, hold the camshaft steady and lightly pull up the cam chain to remove any slack between the crankshaft sprocket and the exhaust camshaft sprocket.

- The exhaust camshaft sprocket has an arrow marked "1" ①. Turn the exhaust camshaft so that the arrow is aligned with the gasket surface of the cylinder head.
- Engage the cam chain with the exhaust camshaft sprocket.
- The other arrow marked "2" should now be pointing straight up. Starting from the roller pin Ⓐ that is directly above the arrow marked "2", count out 24 roller pins (from the exhaust camshaft side going towards the intake camshaft side). Engage the 24th roller pin Ⓑ on the cam chain with the arrow marked "3" on the intake sprocket. Refer to the following illustrations.

NOTE:
The cam chain should now be on all three sprockets. Be careful not to move the crankshaft until the camshaft journal holders and cam chain tensioner are secured.

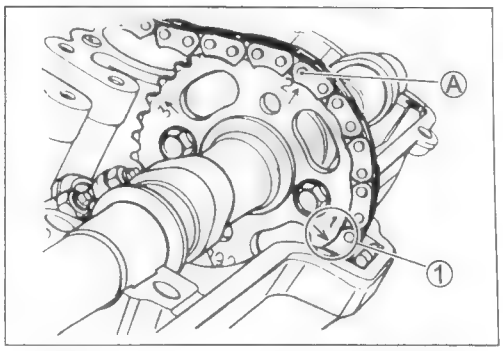

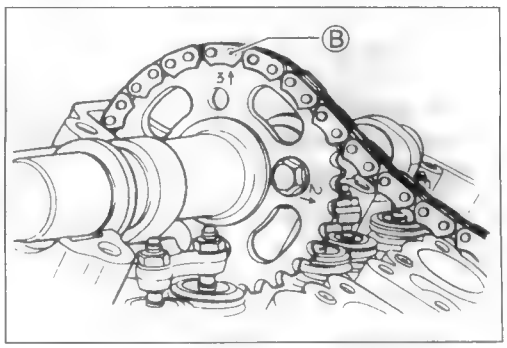

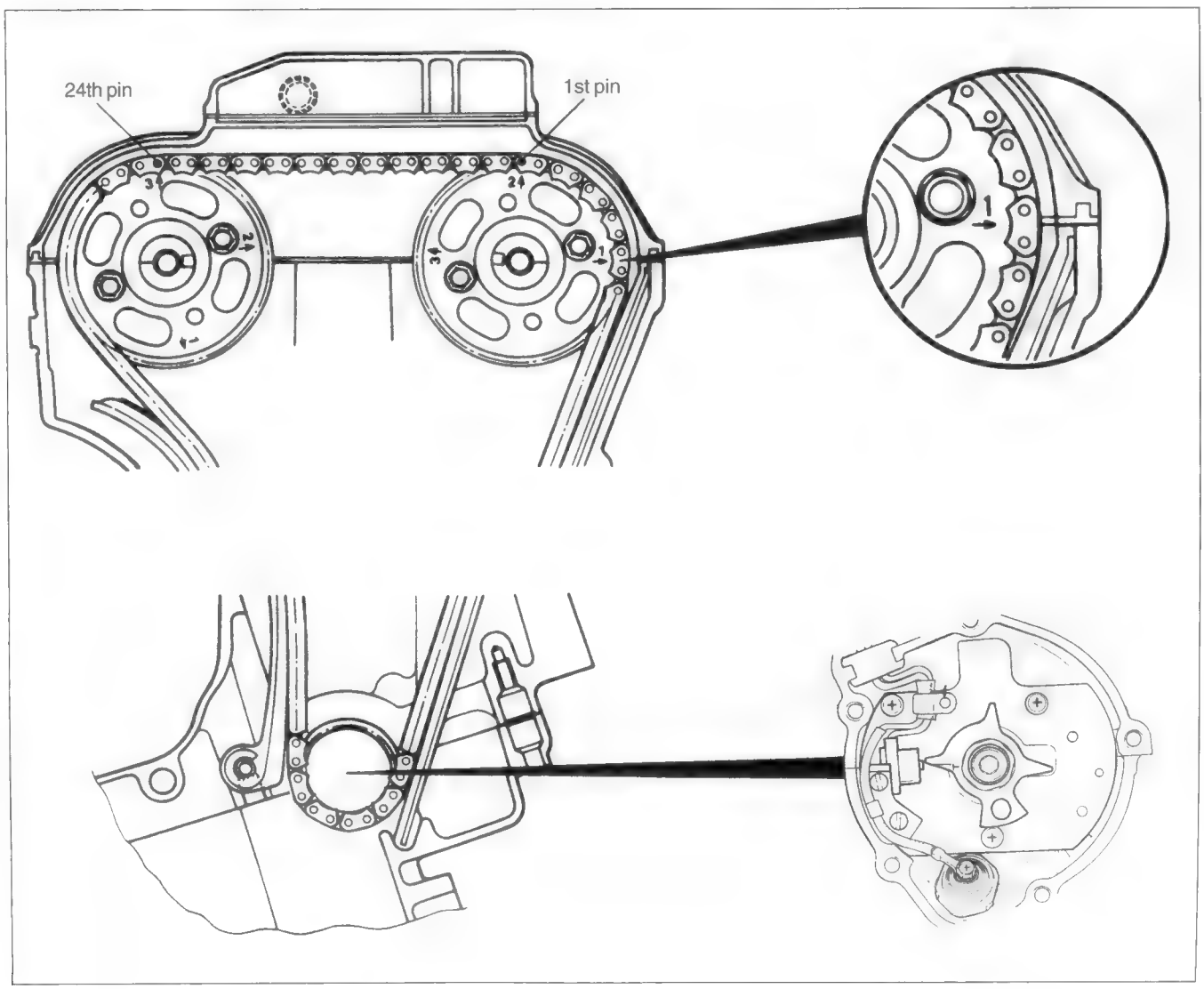

- Each camshaft journal holder is identified with an embossed letter. Install the dowel pins into each camshaft journal holder.
- Fasten the camshafts (IN and EX) evenly by tightening the camshaft journal holder bolts sequentially and in a crisscross pattern.

NOTE:
Damage to the cylinder head or camshaft journal holder thrust surfaces may result if the camshaft journal holders are not tightened evenly.

- Tighten the camshaft journal holder bolts to the specified torque.

Camshaft journal holder bolt: 10 N·m (1.0 kgf·m, 7.0 lb-ft)

⚠ CAUTION

The camshaft journal holder bolts are made of a special material and much superior in strength, compared with other types of high strength bolts.
Take special care not to use other types of bolts instead of these special bolts. To identify these bolts, each of them has a "9" on its head.

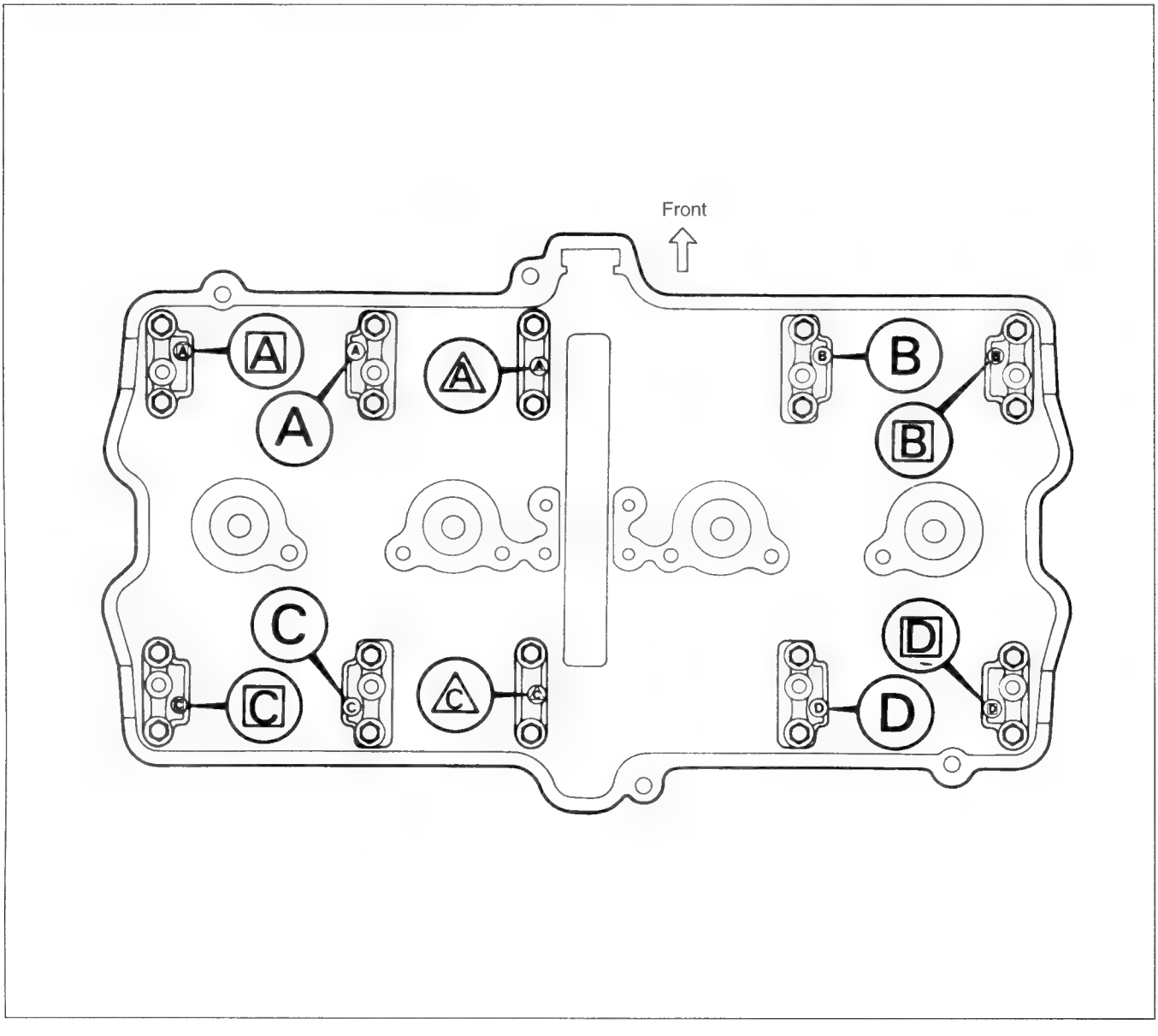

- After removing the spring holder bolt ① and spring, unlock the ratchet mechanism ② and push the push rod ③ all the way into the cam chain tensioner.

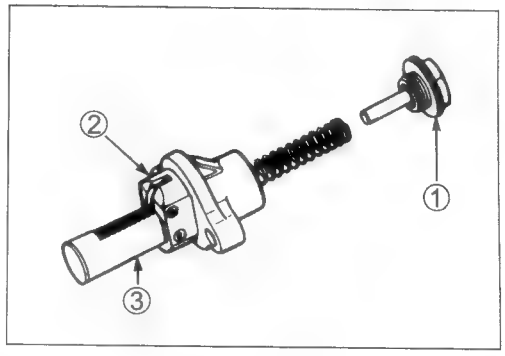

NOTE:
Before installing the cam chain tensioner, turn the crankshaft clockwise to remove any cam chain slack between the crankshaft sprocket and exhaust camshaft sprocket.

- Install a new gasket and the cam chain tensioner onto the cylinder block as shown.
- Tighten the cam chain tensioner bolts to the specified torque.

Cam chain tensioner mounting bolt:
7 N·m (0.7 kgf·m, 5.0 lb-ft)

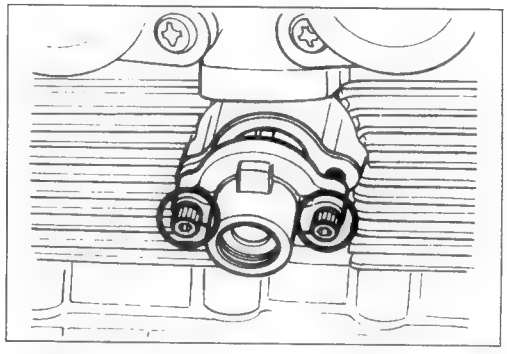

- Insert the spring into the cam chain tensioner and tighten the spring holder bolt ④ to the specified torque.

Spring holder bolt: 35 N·m (3.5 kgf·m, 25.5 lb-ft)

⚠ CAUTION

After installing the cam chain tensioner, check the cam chain slack to make sure that the cam chain tensioner is working properly.

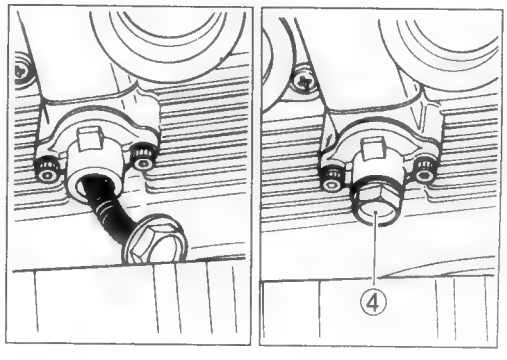

- Recheck the camshaft position (cam timing).
- Install the cam chain guide ⑤ with the four bolts and tighten them to the specified torque.

Cam chain guide mounting bolt:
10 N·m (1.0 kgf·m, 7.0 lb-ft)

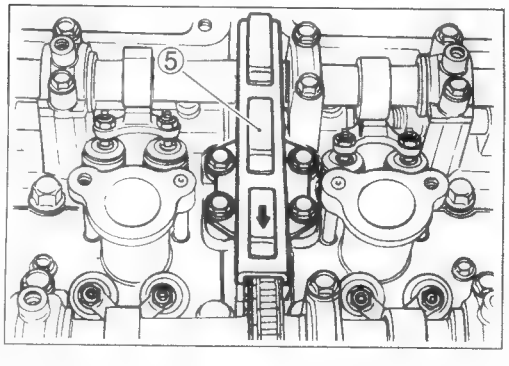

NOTE:
Be sure to face the arrow mark on the cam chain guide towards the exhaust side.

- Pour about 50 ml of engine oil into each oil pocket in the cylinder head.

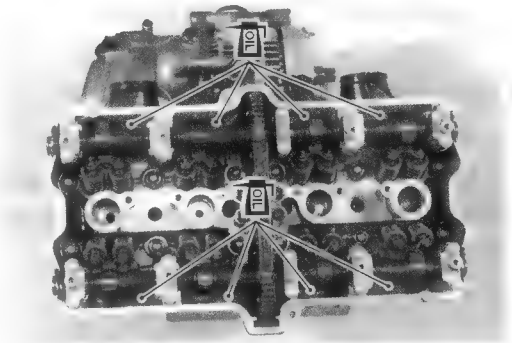

NOTE:
Turn the crankshaft and check that all the moving parts (e.g., cam follower, camshaft) work properly.

⚠ CAUTION

Be sure to check and adjust the valve clearance. (☞2-4)

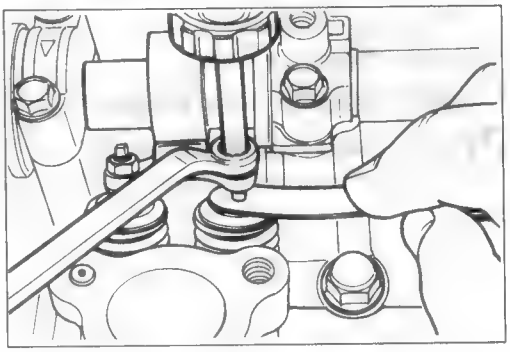

- Apply a light coat of the recommended bond to the signal generator gasket mating surface Ⓐ as shown.

1207B 99000-31140: SUZUKI BOND "1207B"

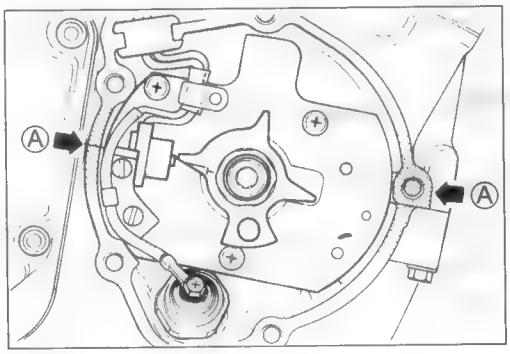

- Install a new gasket and the signal generator cover ①.

NOTE:
* *Install the gasket washer onto the signal generator cover bolt Ⓑ as shown.*
* *Apply a small quantity of THREAD LOCK "1342" to the signal generator cover bolts.*

1342 99000-32050: THREAD LOCK "1342"

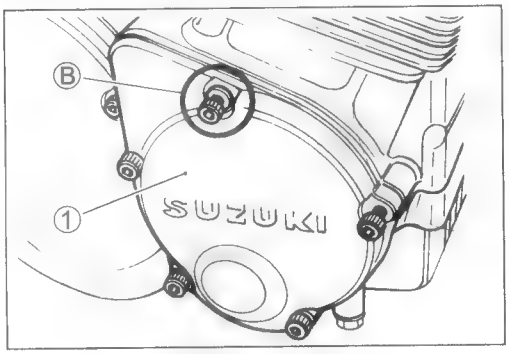

⚠ CAUTION

Use a new gasket to prevent oil leakage.

- Before installing the cylinder head cover gasket onto the cylinder head cover, apply the recommended bond to the groove in the cylinder head cover.
- Apply the recommended bond to the four camshaft end caps of the gasket as shown.

1207B 99000-31140: SUZUKI BOND "1207B"

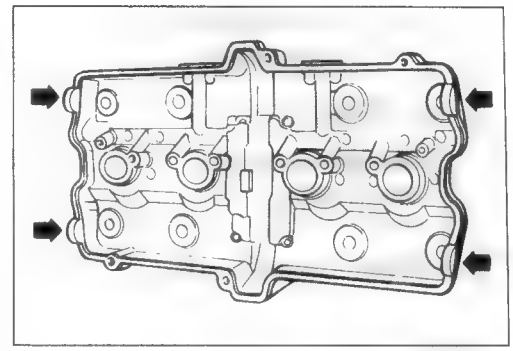

- Place the cylinder head cover onto the cylinder head.
- Install the four gaskets onto each cylinder head cover union bolt ① and tighten them to the specified torque.

⚠ CAUTION

Replace the gaskets with new ones to prevent oil leakage.

Cylinder head cover union bolt ①:
16 N·m (1.6 kgf·m, 11.5 lb-ft)

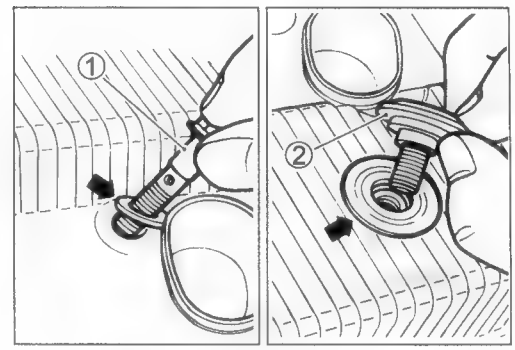

- Install the eight gaskets in the correct locations.
- Tighten the cylinder head cover bolts ② to the specified torque.

⚠ CAUTION

Replace the gaskets with new ones to prevent oil leakage.

Cylinder head cover bolt ②:
14 N·m (1.4 kgf·m, 10.0 lb-ft)

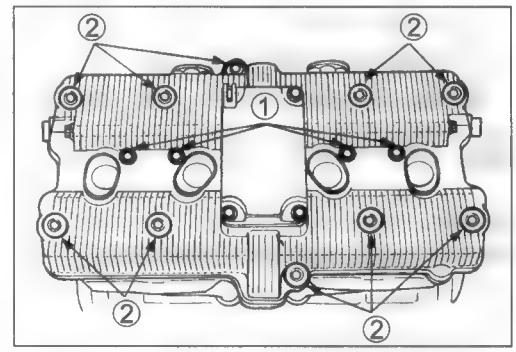

- Install all of the spark plugs. (☞2-6)

- Install the left and right oil hoses and tighten their mounting bolts to the specified torque.

⚠ CAUTION

Replace the O-rings (Ⓐ and Ⓑ) with new ones to prevent oil leakage.

Oil hose mounting bolt: 10 N·m (1.0 kgf·m, 7.0 lb-ft)

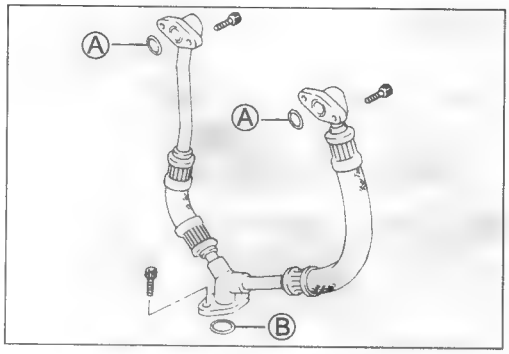

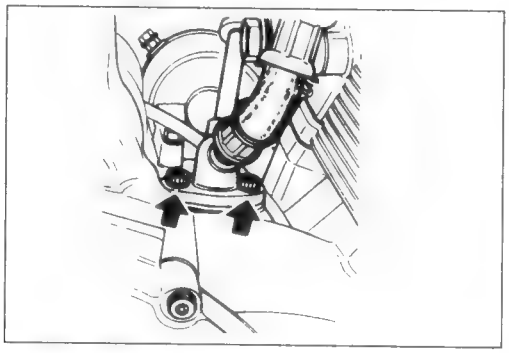

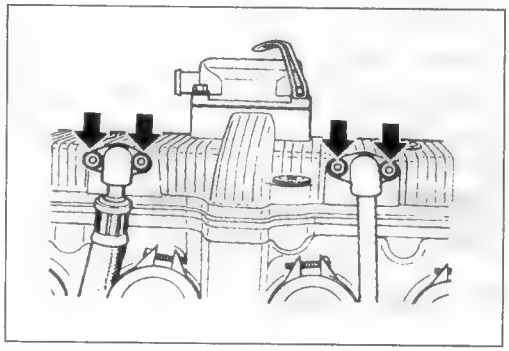

- Turn the oil filter by hand until you feel that the oil filter gasket (O-ring) has contacted the oil filter mounting surface. Then, tighten the oil filter two full turns using the special tool.

TOOL 09915-40610: Oil filter wrench

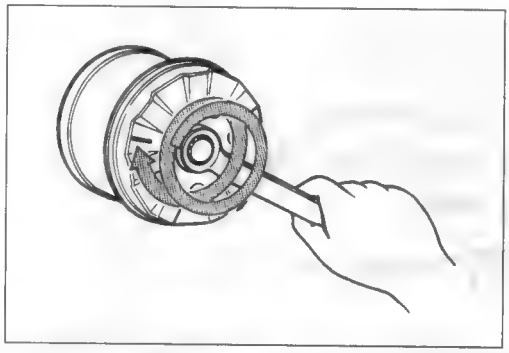

NOTE:
Before installing the oil filter, apply a light coat of engine oil onto its O-ring.

- Install the PAIR valve pipes and hoses and tighten their mounting nuts to the specified torque.

⚠ CAUTION

Replace the gaskets with new ones to prevent exhaust gas leakage.

PAIR valve pipe mounting nut:
10 N·m (1.0 kgf·m, 7.0 lb-ft)

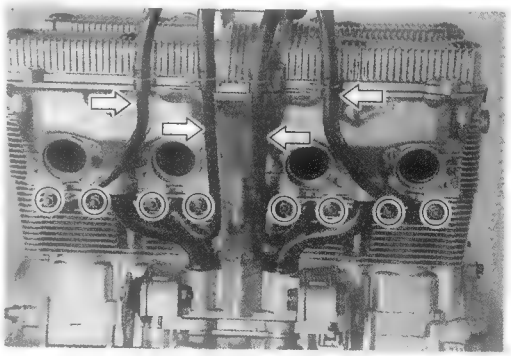

ENGINE COMPONENTS INSPECTION AND SERVICE

CAMSHAFT/CYLINDER HEAD INSPECTION AND SERVICE

⚠ CAUTION

Identify the position of each removed part. Organize the parts in their respective groups (i.e., intake, exhaust, #1 or #2) so that they can be installed in their original locations.

CAMSHAFTS

If the engine produces abnormal noises, vibration or lacks power, a camshaft may be distorted or worn to the service limit. The camshaft runout should be checked. Also, check the cams and journals for wear or damage.

The exhaust camshaft has the embossed letters "EX" and the intake camshaft has the embossed letters "IN".

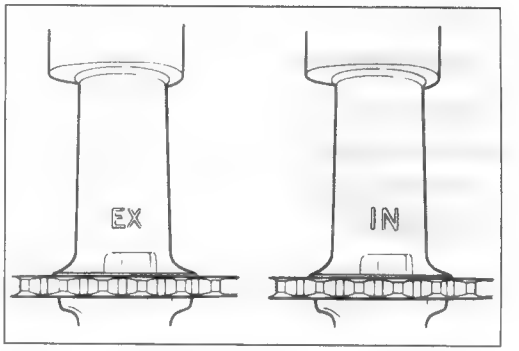

CAM WEAR

Worn-down cams are often the cause of mistimed valve operation resulting in reduced power output.

Measure the cam height Ⓗ using the micrometer. Replace a camshaft if the cams are worn to the service limit.

TOOL **09900-20202: Micrometer (25 – 50 mm)**

DATA **Cam height Ⓗ**
Service Limit: (IN) 32.83 mm (1.2925 in)
(EX) 32.55 mm (1.2815 in)

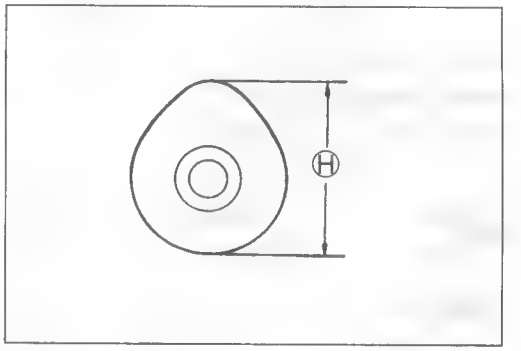

CAMSHAFT JOURNAL WEAR

Determine whether or not each journal is worn down to the limit by measuring the oil clearance with the camshaft installed in place.

Measure the clearance using the plastigauge ①.

TOOL **09900-22301: Plastigauge**
09900-22302: Plastigauge

DATA **Camshaft journal oil clearance (IN & EX)**
Service Limit: 0.150 mm (0.0059 in)

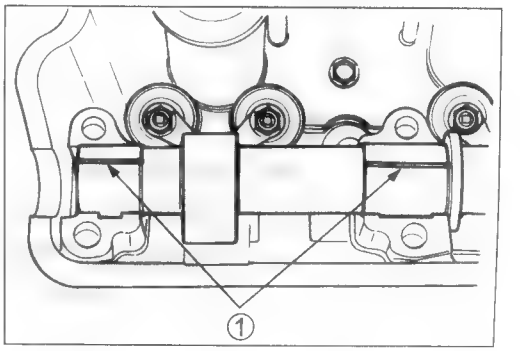

NOTE:

Install each camshaft journal holder to its original position. (☞ 3-44)

Tighten the camshaft journal holder bolts evenly and diagonally to the specified torque.

Camshaft journal holder bolt: 10 N·m (1.0 kgf·m, 7.0 lb-ft)

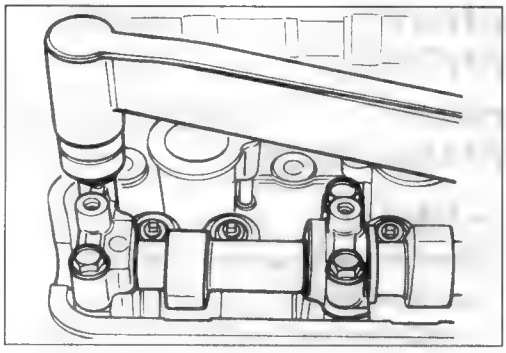

NOTE:
Do not rotate the camshafts with the plastigauge in place.

Remove the camshaft journal holders and measure the width of the compressed plastigauge using the envelope scale. This measurement should be taken at the widest part of the compressed plastigauge.

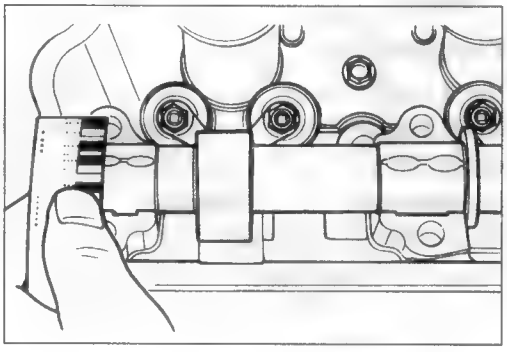

If the camshaft journal oil clearance exceeds the limit, measure the inside diameter of the camshaft journal holder and the outside diameter of the camshaft journal. Replace the camshaft or the cylinder head depending upon which one exceeds the specification.

TOOL **09900-20602: Dial gauge (1/1000 mm)**
09900-22403: Small bore gauge (18 – 35 mm)

DATA **Camshaft journal holder I.D. (IN & EX)**
Standard: 22.012 – 22.025 mm (0.8666 – 0.8671 in)

TOOL **09900-20205: Micrometer (0 – 25 mm)**

DATA **Camshaft journal O.D. (IN & EX)**
Standard: 21.959 – 21.980 mm (0.8645 – 0.8654 in)

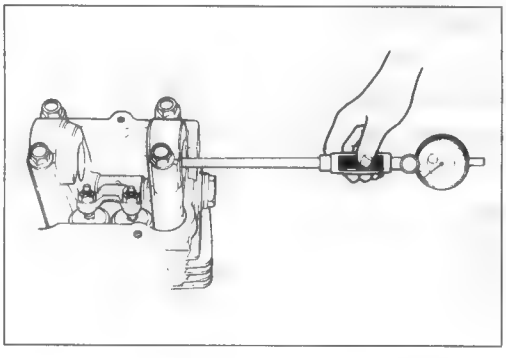

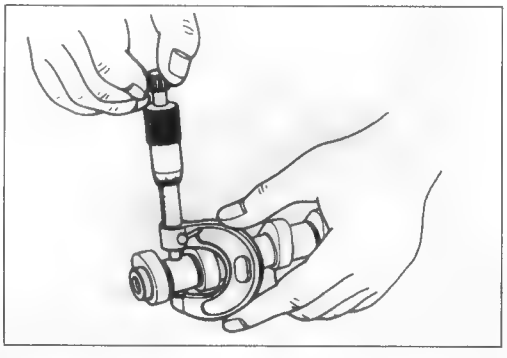

CAMSHAFT RUNOUT

Measure the runout using the dial gauge. Replace the camshaft if the runout exceeds the limit.

TOOL **09900-20606: Dial gauge (1/100 mm)**
09900-20701: Magnetic stand
09900-21304: V-block set (100 mm)

DATA **Camshaft runout (IN & EX)**
Service Limit: 0.1 mm (0.004 in)

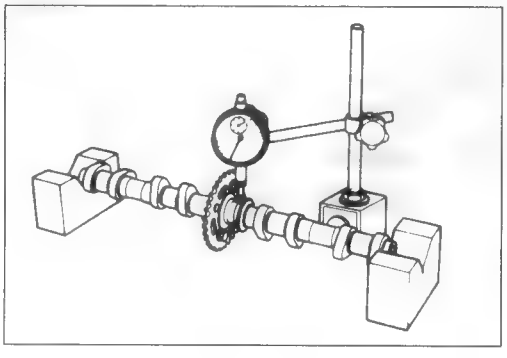

CAMSHAFT SPROCKETS

The fixed position of each camshaft sprocket is determined by arrow mark "3" for the intake camshaft, and by arrow marks "1" and "2" for the exhaust camshaft, as located in reference to the notch ① on the right end of each camshaft.
Inspect the teeth of each camshaft sprocket for wear or damage. If they are worn or damaged, replace the sprockets and cam chain as a set.

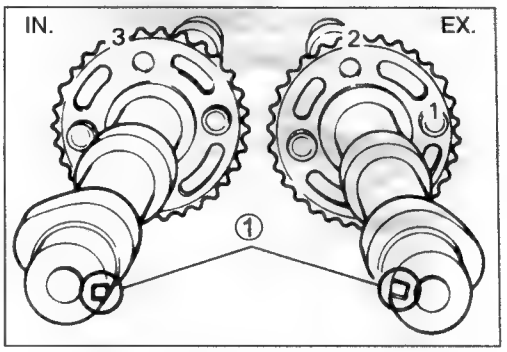

- Apply THREAD LOCK SUPER "1303" to the threads of the camshaft sprocket bolts and then tighten them to the specified torque.

1303 99000-32030: THREAD LOCK SUPER "1303"

Camshaft sprocket bolt: 25 N·m (2.5 kgf·m, 18.0 lb-ft)

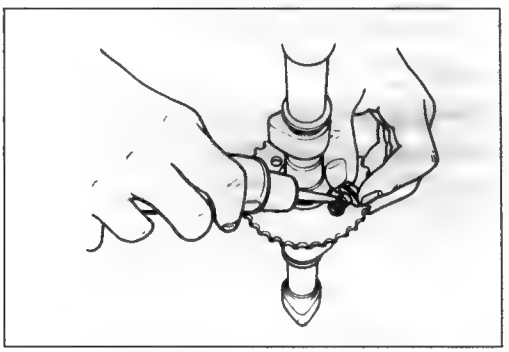

CAM CHAIN TENSIONER

The cam chain tensioner is maintained at the proper tension by an automatically adjusted tensioner.
Unlock the ratchet mechanism ① and move the push rod ② in place to see if it slides smoothly. If it does not slide smoothly or the ratchet mechanism is worn or damaged, replace the cam chain tensioner with a new one.

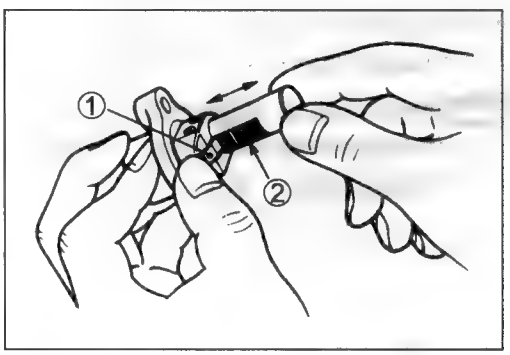

CAM CHAIN GUIDE

Check the contacting surface of the cam chain guide. If it is worn or damaged, replace it with a new one.

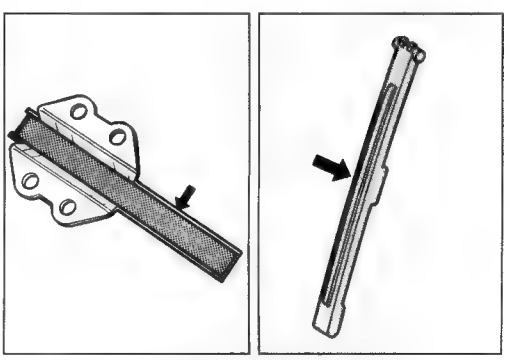

CAM CHAIN TENSIONER GUIDE

Check the contacting surface of the cam chain tensioner guide. If it is worn or damaged, replace it with a new one.
If it is necessary to replace the cam chain tensioner guide, remove the engine and separate the upper and lower crankcases. (☞3- 23)

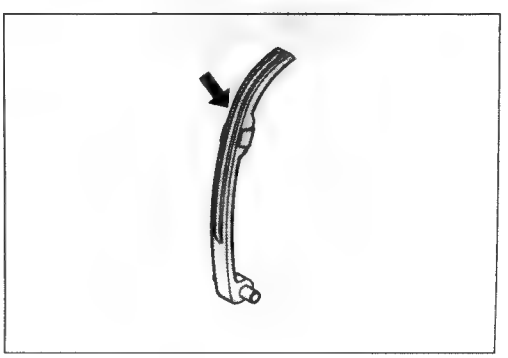

CYLINDER HEAD DISASSEMBLY

- Remove the rocker arm shaft set bolt ① and cylinder head plug ②.

TOOL 09900-00410: Hexagon wrench set

- Remove the rocker arm shaft ①, rocker arm ② and spring ③.

NOTE:
To remove the rocker arm shaft, screw a 8-mm bolt into the rocker arm shaft end and then pull out the shaft.

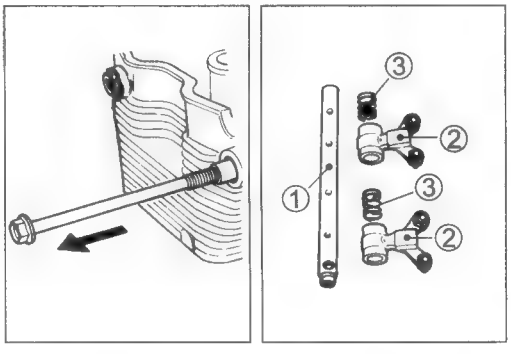

- Using the special tools, compress the valve spring and remove the valve cotters ④ from the valve stem.

TOOL 09916-14510: Valve lifter
09916-14910: Valve lifter attachment
09916-84511: Tweezers

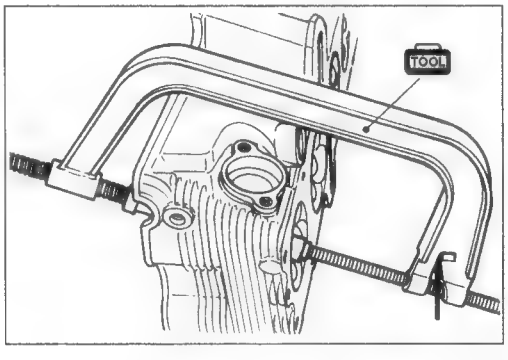

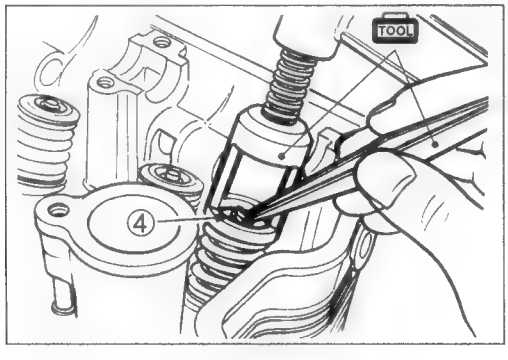

- Remove the valve spring retainer ⑤ and the inner and outer valve springs ⑥.

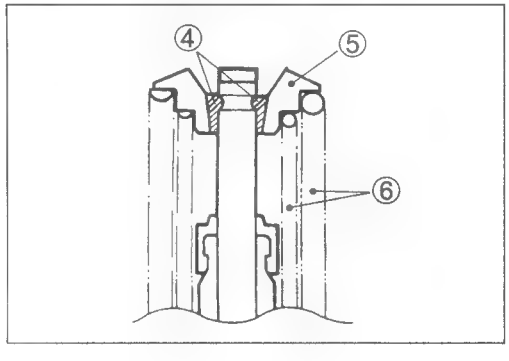

- Remove the valve spring seat.
- Remove the valve from the combustion chamber side.
- Remove the oil seal.

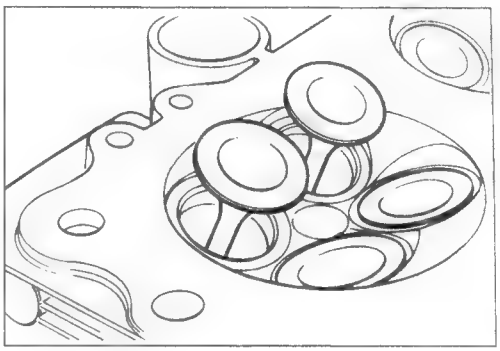

CYLINDER HEAD DISTORTION

Decarbonize the combustion chambers.
Check the gasket surface of the cylinder head for distortion. Use a straightedge and thickness gauge. Take clearance readings at several places. If readings exceed the service limit, replace the cylinder head.

TOOL **09900-20803: Thickness gauge**

DATA **Cylinder head distortion**
Service Limit: 0.2 mm (0.008 in)

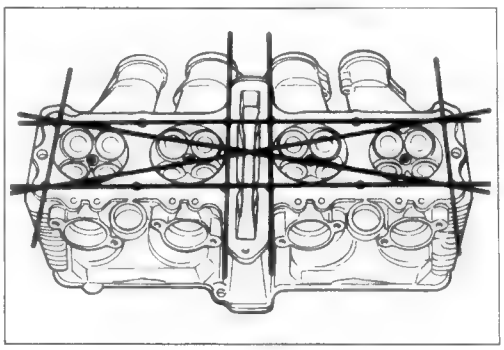

VALVE STEM RUNOUT

Support the valve using V-blocks, as shown, and check its runout using the dial gauge.
If the runout exceeds the service limit, replace the valve.

TOOL **09900-20606: Dial gauge (1/100 mm)**
09900-20701: Magnetic stand
09900-21304: V-block set (100 mm)

DATA **Valve stem runout**
Service Limit: 0.05 mm (0.002 in)

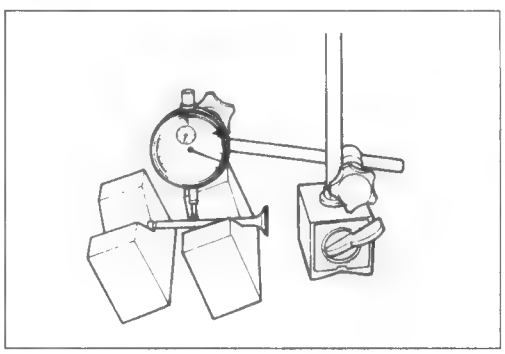

VALVE HEAD RADIAL RUNOUT

Place the dial gauge at a right angle to the valve head face and measure the valve head radial runout.
If it measures more than the service limit, replace the valve.

TOOL **09900-20606: Dial gauge (1/100 mm)**
09900-20701: Magnetic stand
09900-21304: V-block set (100 mm)

DATA **Valve head radial runout**
Service Limit: 0.03 mm (0.001 in)

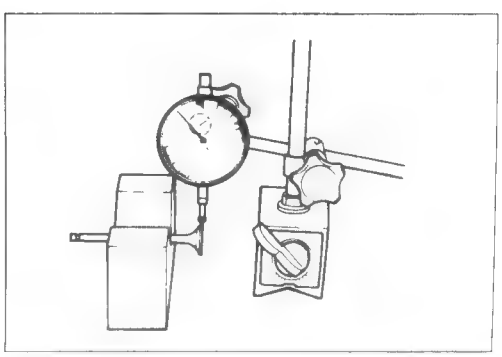

VALVE FACE WEAR

Visually inspect each valve face for wear. Replace any valve with an abnormally worn face. The thickness of the valve face decreases as the face wears. Measure the valve face T. If it is out of specification replace the valve with a new one.

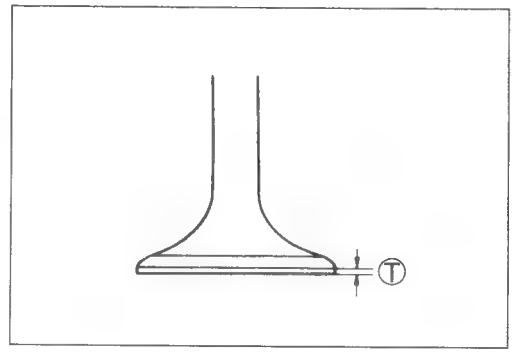

TOOL **09900-20102: Vernier calipers**

DATA **Valve face thickness Ⓣ**
Service Limit: 0.5 mm (0.02 in)

VALVE STEM DEFLECTION

Lift the valve about 10 mm (0.39 in) from the valve seat. Measure the valve stem deflection in two directions, "X" and "Y", perpendicular to each other. Position the dial gauge as shown. If the deflection exceeds the service limit, then determine whether the valve or the guide should be replaced with a new one.

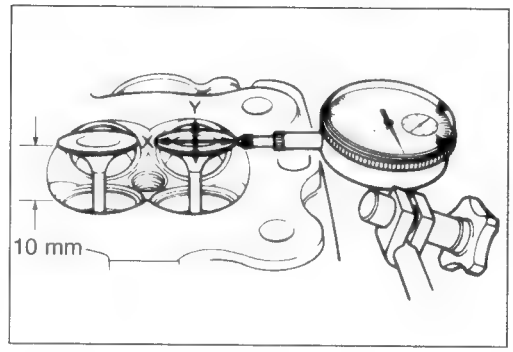

TOOL **09900-20606: Dial gauge (1/100 mm)**
09900-20701: Magnetic stand

DATA **Valve stem deflection (IN & EX)**
Service Limit: 0.35 mm (0.014 in)

VALVE STEM WEAR

Measure the valve stem O.D. using the micrometer. If it is out of specification, replace the valve with a new one. If the valve stem O.D. is within specification but the valve stem deflection is not, replace the valve guide. After replacing the valve or valve guide, recheck the deflection.

TOOL **09900-20205: Micrometer (0 – 25 mm)**

DATA **Valve stem O.D.**
Standard (IN) : 4.965 – 4.980 mm (0.1955 – 0.1961 in)
(EX) : 4.955 – 4.970 mm (0.1950 – 0.1957 in)

NOTE:
If valve guides have to be replaced, refer to the valve guide servicing steps below.

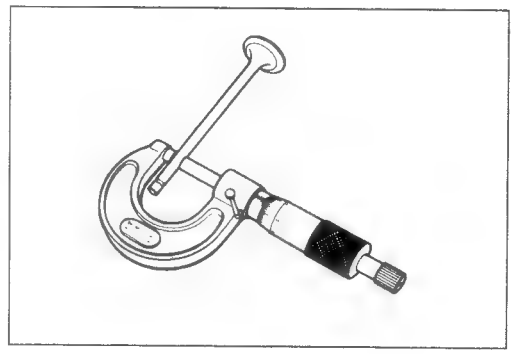

VALVE GUIDE SERVICING

- Using the valve guide remover ①, drive the valve guide out toward the intake or exhaust camshaft side.

09916-44310: Valve guide remover/installer

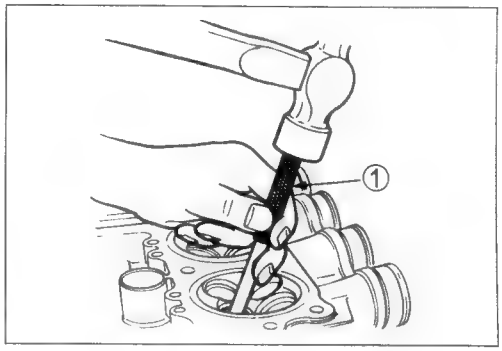

NOTE:

** Discard the removed valve guide subassemblies.*

** Only oversized valve guides are available as replacement parts. (Part No. 11116-06B70)*

- Re-finish the valve guide holes in the cylinder head using the reamer and handle.

09916-34580: Valve guide reamer
09916-34542: Valve guide reamer handle

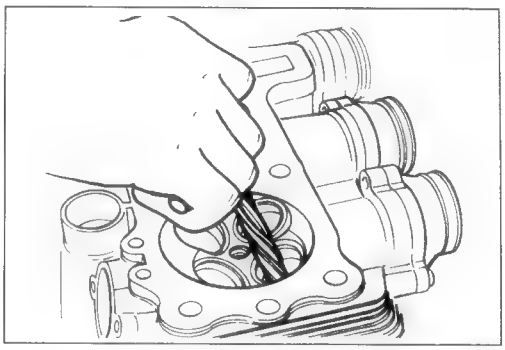

- Install a ring onto each valve guide. Be sure to use new rings.
- Oil the stem hole of each valve guide and drive the guide into the guide hole using the valve guide installer.

② Valve guide
③ Cylinder head

09916-44310: Valve guide remover/installer

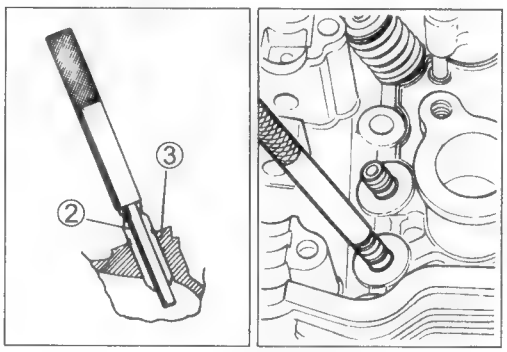

⚠ CAUTION

Failure to oil the valve guide hole before driving the new guide into place may result in a damaged guide or head.

- After installing the valve guides, re-finish their guiding bores using the reamer. Be sure to clean and oil the guides after reaming.

09916-34570: Valve guide reamer
09916-34542: Valve guide reamer handle

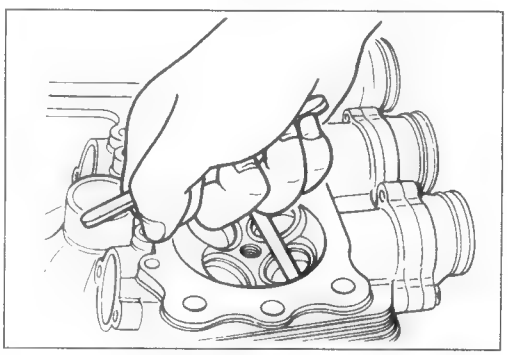

NOTE:

Insert the reamer from the combustion chamber and always turn the reamer handle clockwise.

VALVE SEAT WIDTH

- Coat the valve seat uniformly with Prussian blue. Install the valve and attach a valve lapper onto it. Tap the coated seat with the valve face in a rotating manner, in order to obtain a clear impression of the seating contact.

TOOL 09916-10911: Valve lapper set

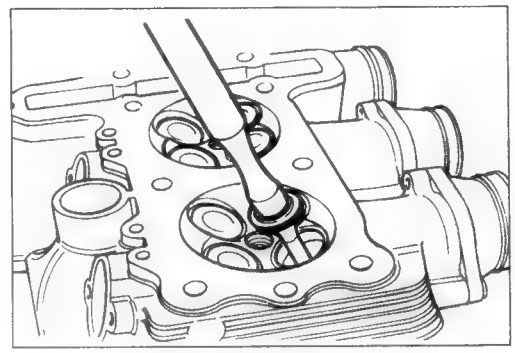

- The ring-like dye impression left on the valve face must be continuous without any breaks. In addition, the width of the dye ring, which is the valve seat width, must be within the following specification.

DATA Valve seat width Ⓦ
Standard: 0.9 – 1.1 mm (0.035 – 0.043 in)

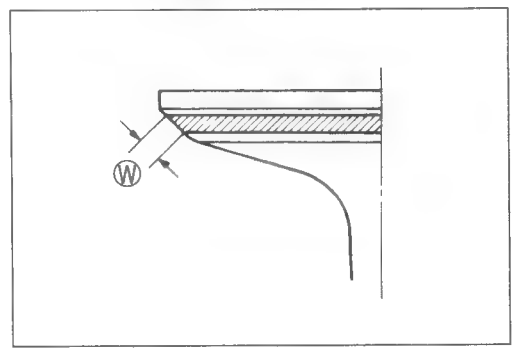

If the valve seat is out of specification, re-cut the seat.

VALVE SEAT SERVICING

The valve seats ① for both the intake and exhaust valves are machined to two different angles. The seat contact surface is cut at 45°.

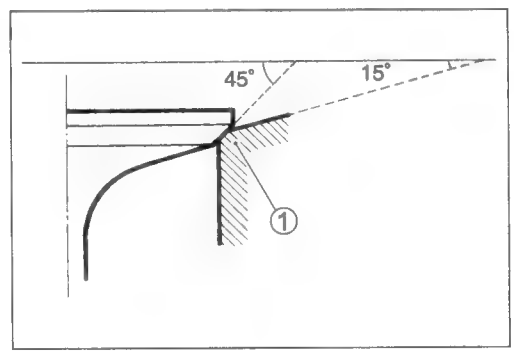

	INTAKE	EXHAUST
45°	N-122	N-122
15°	N-121	N-121

TOOL 09916-21111: Valve seat cutter set
09916-20610: Valve seat cutter (N-121)
09916-20620: Valve seat cutter (N-122)
09916-24311: Solid pilot (N-100-5.0)

NOTE:
Use the solid pilot (N-100-5.0) along with the valve seat cutter (N-121 and -122).

⚠ CAUTION

The valve seat contact area must be inspected after each cut.

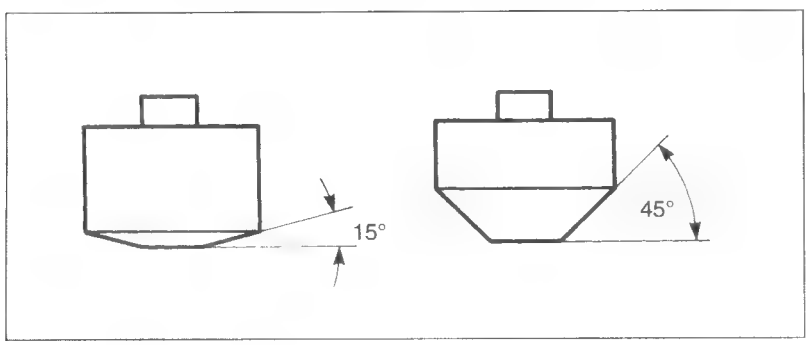

- When installing the solid pilot ①, rotate it slightly.

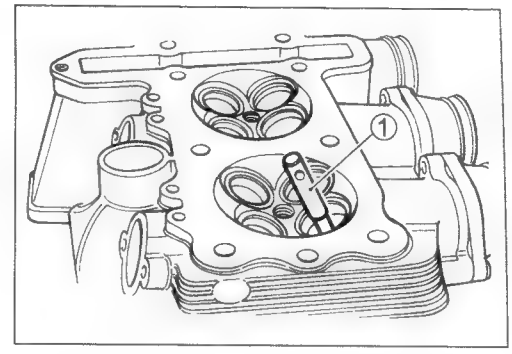

- Seat the pilot snugly. Install the 45° cutter ②, attachment ③ and T-handle ④.

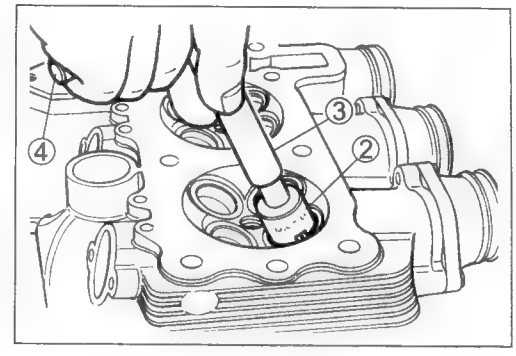

INITIAL SEAT CUT

- Using the 45° cutter, descale and clean up the seat. Rotate the cutter one or two turns.
- Measure the valve seat width Ⓦ after every cut.

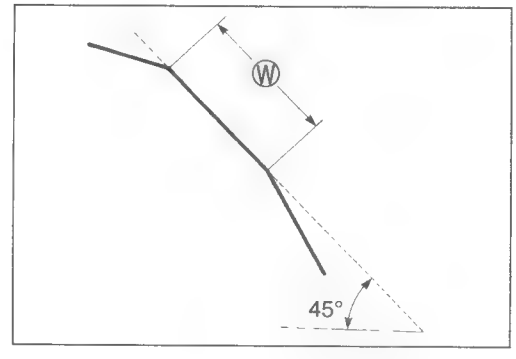

- If the valve seat is pitted or burned, use the 45° cutter to condition the seat some more.

NOTE:
Cut only the minimum amount necessary from the seat to prevent the possibility of the valve stem becoming too close to the rocker arm for correct valve contact angle.

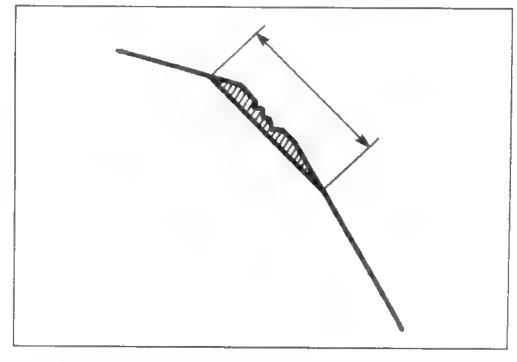

TOP NARROWING CUT

- If the contact area is too high on the valve, or if it is too wide, use the 15° cutter to lower and narrow the contact area.

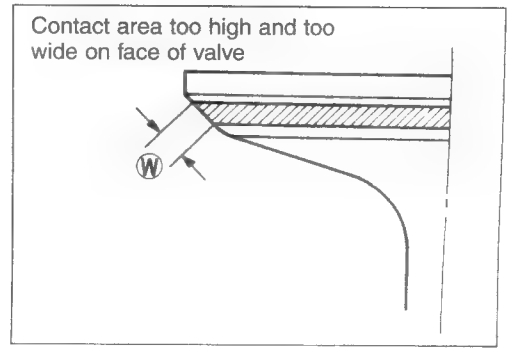

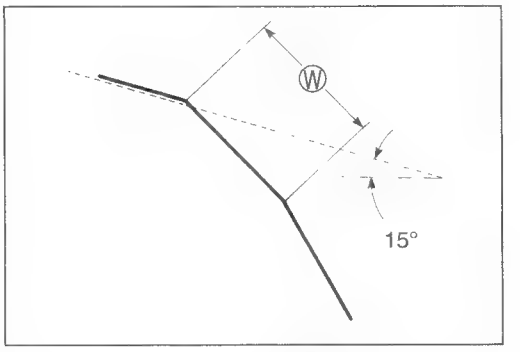

FINAL SEAT CUT

- If the contact area is too low or too narrow, use the 45° cutter to raise and widen the contact area.

NOTE:
After cutting the 15° angle, it is possible that the valve seat (45°) is too narrow. If so, re-cut the valve seat to the correct width.

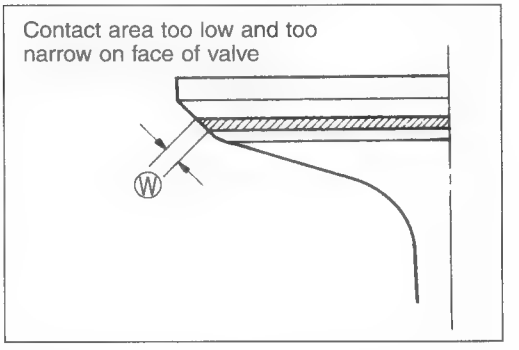

- After the desired seat position and width is achieved, use the 45°cutter very lightly to clean up any burrs caused by the previous cutting operations.

⚠ CAUTION

Do not use lapping compound after the final cut is made. The finished valve seat should have a velvety smooth finish but not a highly polished or shiny finish. This will provide a soft surface for the final seating of the valve which will occur during the first few seconds of engine operation.

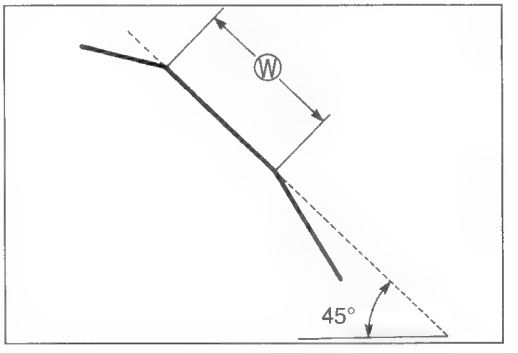

NOTE:
After servicing the valve seats, be sure to check the valve clearance after the cylinder head has been reinstalled. (☞ 2-4)

VALVE SEAT SEALING CONDITION INSPECTION

Clean and assemble the cylinder head and valve components. Fill the intake and exhaust ports with gasoline to check for leaks. If any leaks occur, inspect the valve seat and face for burrs or other things that could prevent the valve from sealing.

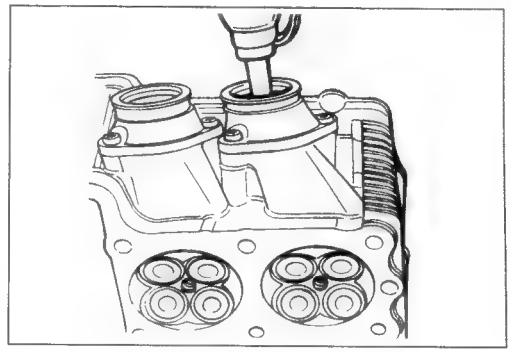

⚠ WARNING

Always use extreme caution when handling gasoline.

NOTE:

After servicing the valve seats, be sure to check the valve clearance after the cylinder head has been reinstalled. (☞ 2-4)

VALVE STEM END CONDITION

Inspect the valve stem end face for pitting and wear. If pitting or wear is present, resurface the valve stem end. Make sure that the length ① is not less than 2.5 mm (0.10 in). If this length becomes less than 2.5 mm (0.10 in), replace the valve.

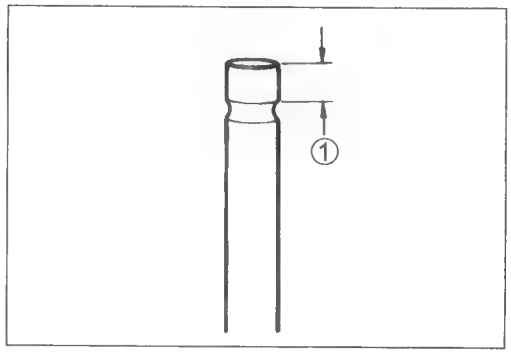

DATA **Valve stem end length**
Service Limit: 2.5 mm (0.10 in)

VALVE SPRINGS

The force of the coil spring keeps the valve seat tight. A weakened spring results in reduced engine power output and often accounts for the chattering noise coming from the valve mechanism.

Check the valve springs for proper strength by measuring their free length and also by the force required to compress them. If the spring length is less than the service limit or if the force required to compress the spring does not fall within the specified range, replace both the inner and outer springs as a set.

TOOL **09900-20102: Vernier calipers**

DATA **Valve spring free length (IN & EX)**
Service Limit: INNER : 35.0 mm (1.38 in)
OUTER : 38.4 mm (1.51 in)

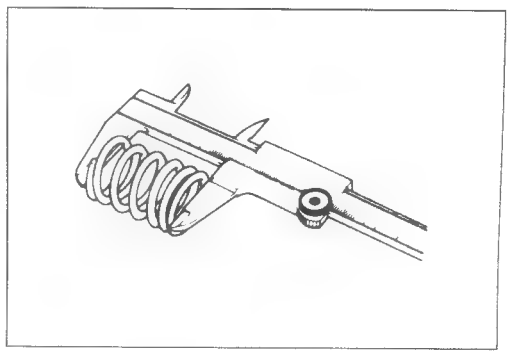

DATA Valve spring tension (IN & EX)
Standard: INNER: 5.6 – 6.6 kgf/28 mm
(12.3 – 14.6 lbs/1.10 in)
OUTER: 12.8 – 15.0 kgf/31.5 mm
(28.2 – 33.1 lbs/1.24 in)

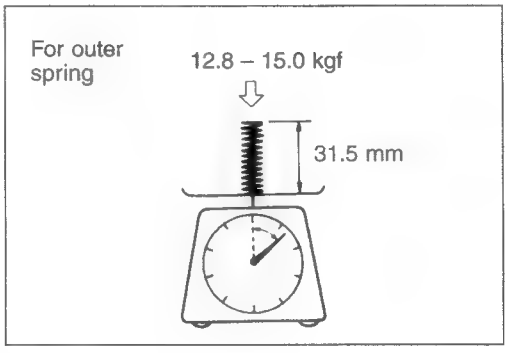

ROCKER ARM SHAFT OUTSIDE DIAMETER INSPECTION

On the sliding surface, take two measurements, at right angle to each other.
If the outside diameter measured is less than the standard value, replace the shaft.

DATA Rocker arm shaft O.D.
Standard: 11.973 – 11.984 mm (0.4714 – 0.4718 in)

TOOL 09900-20205: Micrometer (0 – 25 mm)

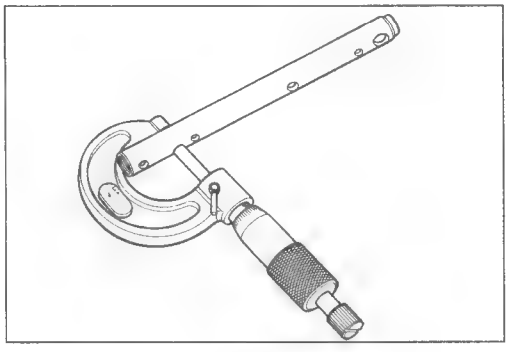

ROCKER ARM INSIDE DIAMETER INSPECTION

Measure the rocker arm inside diameter in two directions at right angle to each other.
If the inside diameter measured exceeds the standard value, replace the rocker arm.

DATA Rocker arm I.D.
Standard: 12.000 – 12.018 mm (0.4724 – 0.4731 in)

TOOL 09900-20605: Dial calipers

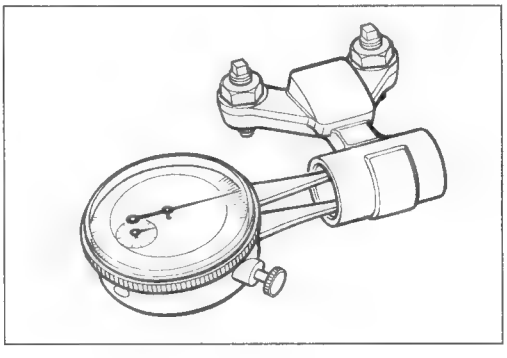

CYLINDER HEAD REASSEMBLY

- Locate the plate Ⓐ on the cylinder head of exhaust side.

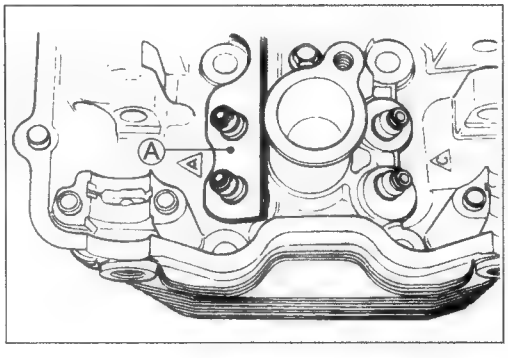

- Oil each oil seal ① and press-fit them into position using the valve guide installer.
- Install each valve spring seat ② (for intake side) and ③ (for exhaust side).

TOOL 09916-44310: Valve guide remover/installer

⚠ CAUTION

Do not reuse the oil seals.

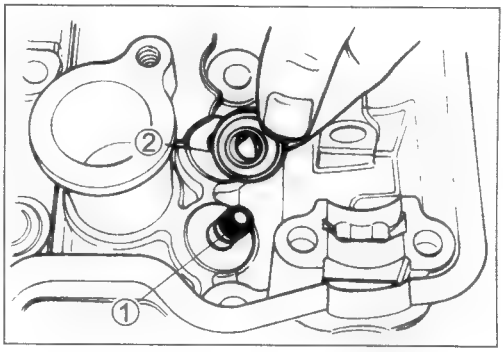

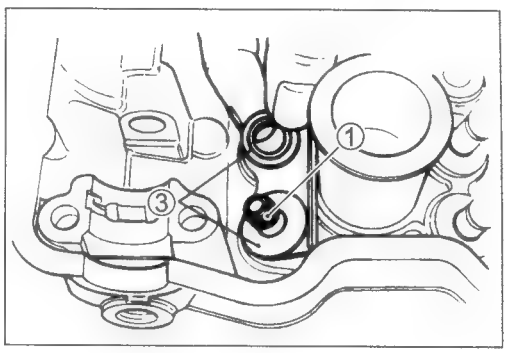

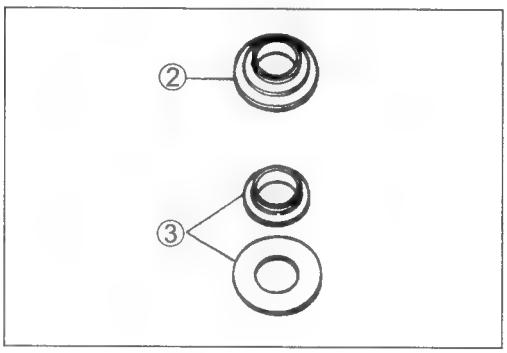

- Insert the valves with their stems coated with molybdenum oil solution (mixed engine oil/moly paste).
  Coat the entire stem making sure that there are no gaps.

⚠ CAUTION

When inserting each valve, take care not to damage the lip of the oil seal.

M99000-25140: SUZUKI MOLY PASTE

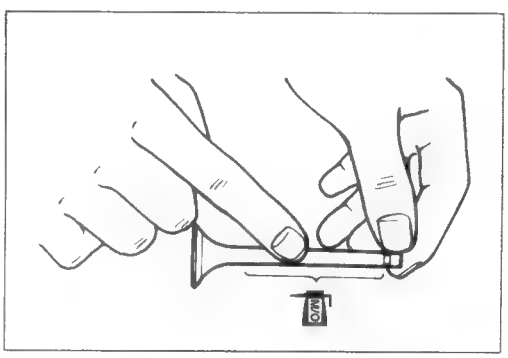

- Install the valve springs with the smaller pitch Ⓐ facing the cylinder head.

Ⓑ Larger pitch
Ⓒ Up
Ⓓ Paint mark

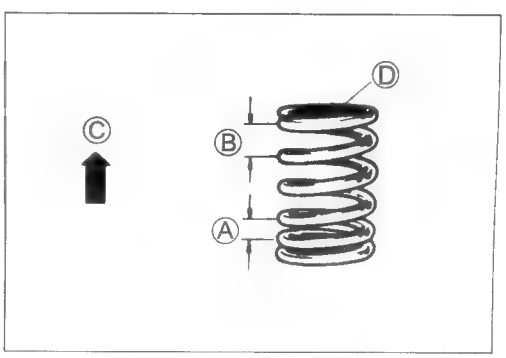

- Install the valve spring retainer, press down the springs using the valve lifter and then install the cotter halves on to the stem end. Then, release the valve lifter to allow the cotter ① to wedge between the retainer and the valve stem. Be sure that the rounded lip Ⓐ of the cotter fits snugly into the groove Ⓑ in the stem end.

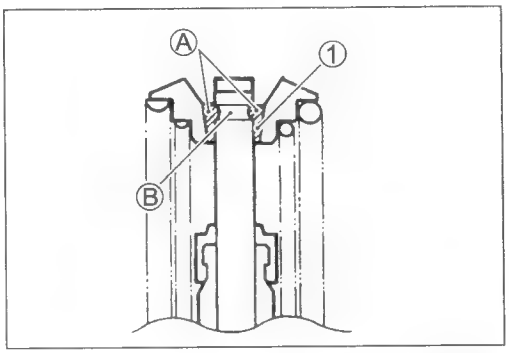

TOOL **09916-14510: Valve lifter**
09916-14910: Valve lifter attachment
09916-84511: Tweezers

⚠ CAUTION

Be sure to install all of the parts in their original positions.

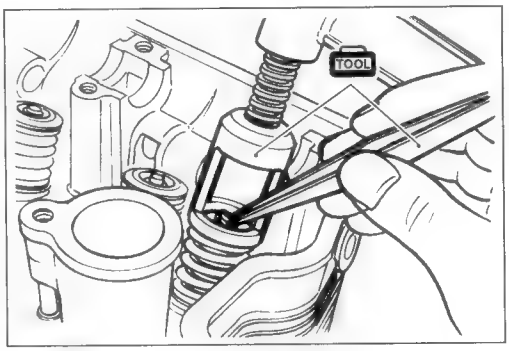

- Apply engine oil to the rocker arm shaft sufficiently.
- Install the rocker arms ②, the springs ③ and the rocker arm shaft.

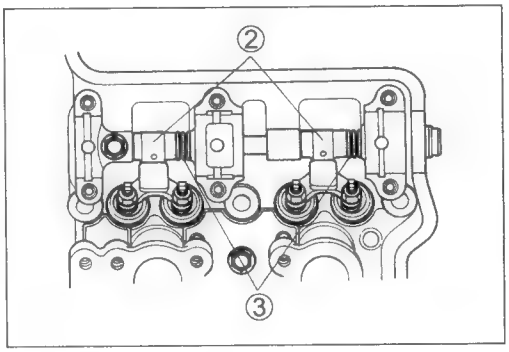

- Tighten the rocker arm shaft set bolt ④ and cylinder head plug ⑤ to the specified torque.

TOOL **09900-00410: Hexagon wrench set**

Rocker arm shaft set bolt ④: 9 N·m (0.9 kgf·m, 6.5 lb-ft)
Cylinder head plug ⑤: 28 N·m (2.8 kgf·m, 20.0 lb-ft)

INTAKE PIPES

- When installing the intake pipe, apply SUZUKI SUPER GREASE "A" to the O-ring.

99000-25010: SUZUKI SUPER GREASE "A"

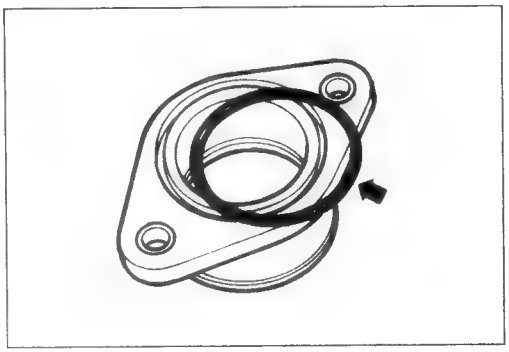

- When installing the intake pipe bolts, apply a small quantity of THREAD LOCK "1342" to these thread.

1342 99000-32050: THREAD LOCK "1342"

⚠ CAUTION

Use a new O-ring to prevent the joint from sucking in any air.

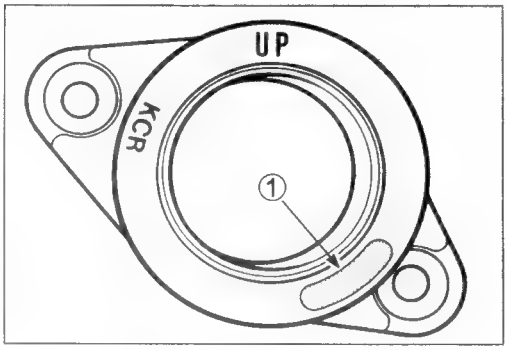

NOTE:

* *When replacing the intake pipes, identify the different intake pipes according to each I.D. code ①.*
  (1-26E0 for cylinder #1)
  (1-26E0 for cylinder #2)
  (3-26E0 for cylinder #3)
  (3-26E0 for cylinder #4)
* *Make sure that the "UP" mark faces up.*

CYLINDER BLOCK/PISTON INSPECTION

CYLINDER BLOCK DISTORTION

Check the gasket surface of the cylinder block for distortion. Use a straightedge and thickness gauge. Take clearance readings at several places. If any reading exceeds the service limit, replace the cylinder block.

TOOL 09900-20803: Thickness gauge

DATA Cylinder block distortion
Service Limit: 0.2 mm (0.008 in)

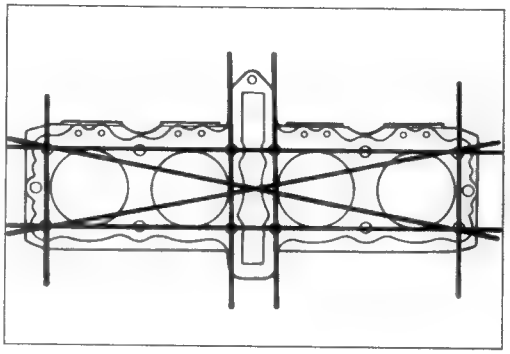

CYLINDER BORE

Measure the cylinder bore diameter at six places. If any one of the measurements exceed the limit, overhaul the cylinder and replace the piston with an oversize piston. The remaining cylinders must also be rebored accordingly; otherwise, the imbalance might cause excessive vibration.

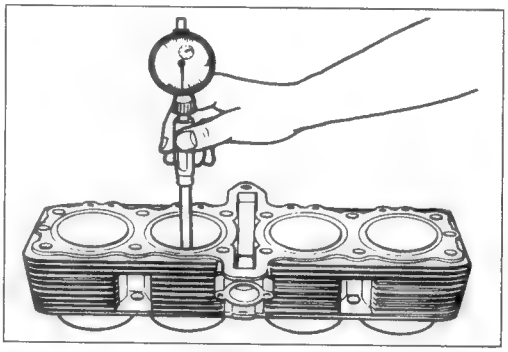

TOOL 09900-20508: Cylinder gauge set

DATA Cylinder bore
Standard: 62.600 – 62.615 mm (2.4646 – 2.4652 in)
Service Limit: 62.690 mm (2.4681 in)

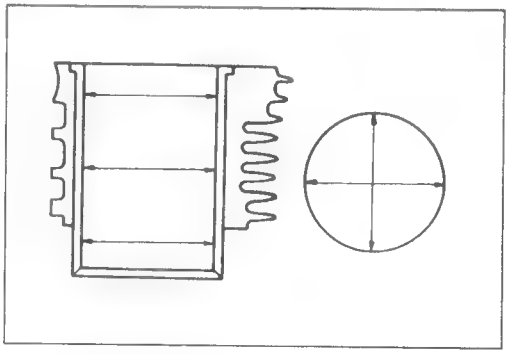

PISTON DIAMETER

Measure the piston diameter using the micrometer at 15 mm from the skirt end.

If the piston diameter is less than the service limit, replace the piston.

TOOL 09900-20203: Micrometer (50 – 75 mm)

DATA Piston diameter
Service Limit: 62.480 mm (2.4598 in)

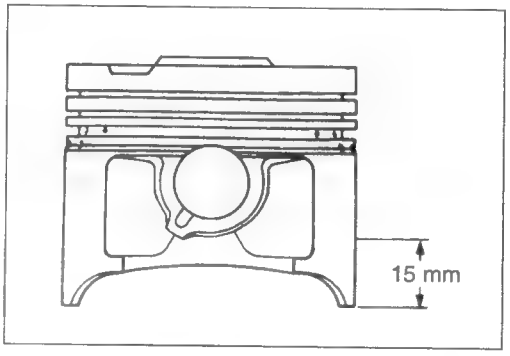

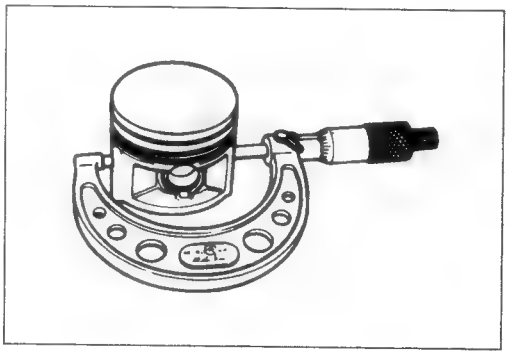

PISTON-TO-CYLINDER CLEARANCE

Subtract the piston diameter from the cylinder bore diameter. If the piston-to-cylinder clearance exceeds the service limit, rebore the cylinder and use an oversize piston or replace both the cylinder and the piston.

DATA Piston-to-cylinder clearance
Service Limit: 0.12 mm (0.0047 in)
Piston oversize: 0.5, 1.0 mm

PISTON-RING-TO-GROOVE CLEARANCE

Measure the side clearances of the 1st and 2nd piston rings using the thickness gauge. If any of the clearances exceed the limit, replace both the piston and piston rings.

TOOL 09900-20803: Thickness gauge
09900-20205: Micrometer (0 – 25 mm)

DATA Piston-ring-to-groove clearance
Service Limit: (1st) : 0.18 mm (0.007 in)
(2nd) : 0.15 mm (0.006 in)

DATA Piston ring groove width
Standard: (1st) : 1.02 – 1.04 mm (0.040 – 0.041 in)
(2nd) : 0.81 – 0.83 mm (0.032 – 0.033 in)
(Oil) : 1.51 – 1.53 mm (0.059 – 0.060 in)

DATA Piston ring thickness
Standard: (1st) : 0.97 – 0.99 mm (0.038 – 0.039 in)
(2nd) : 0.77 – 0.79 mm (0.030 – 0.031 in)

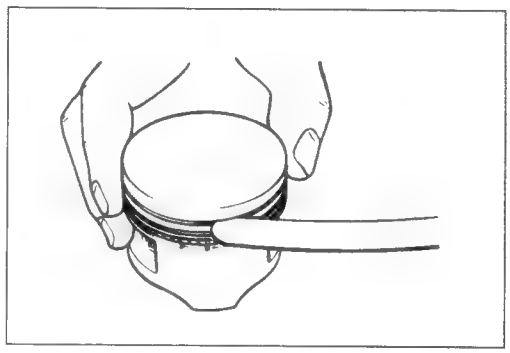

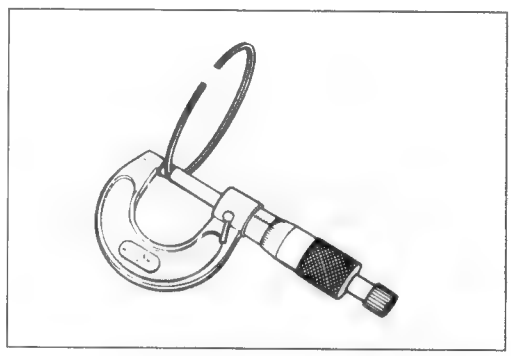

PISTON RING FREE END GAP AND PISTON RING END GAP

Measure the piston ring free end gap using vernier calipers. Next, fit the piston ring squarely into the cylinder and measure the piston ring end gap using the thickness gauge. If any of the measurements exceed the service limit, replace the piston ring with a new one.

TOOL 09900-20102: Vernier calipers

DATA Piston ring free end gap
Service Limit: (1st) : 5.4 mm (0.21 in)
(2nd) : 5.6 mm (0.22 in)

TOOL 09900-20803: Thickness gauge

DATA Piston ring end gap
Service Limit: (1st) : 0.5 mm (0.02 in)
(2nd) : 0.7 mm (0.03 in)

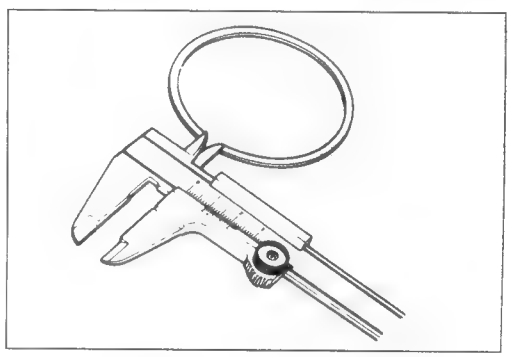

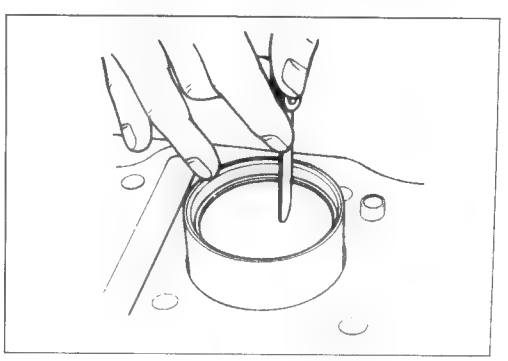

Oversize piston ring

The following two types of oversize piston rings are used. They bear the following identification numbers.

	1st	2nd
0.5 mm	50	50
1.0 mm	100	100

Oversize oil ring

The following two types of oversize oil rings are available as optional parts. They bear the following identification marks.

SIZE	COLOR
STD	NIL
0.5 mm O.S.	RED
1.0 mm O.S.	YELLOW

Oversize side rail

Measure the outside diameter to identify the size.

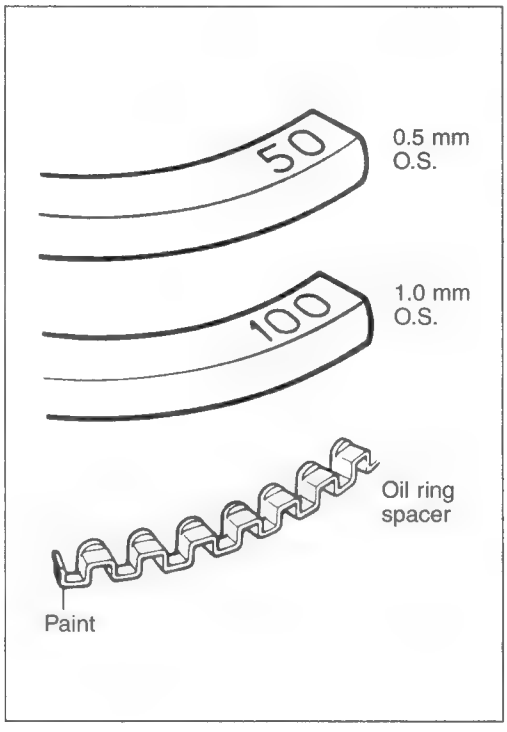

PISTON PINS AND PIN BORE

Measure the piston pin bore inside diameter using the small bore gauge. If either is out of specification or the difference between these measurement is more than the limits, replace the piston.

TOOL **09900-20602: Dial gauge (1/1000 mm)**
09900-22403: Small bore gauge (18 – 35 mm)

DATA **Piston pin bore I.D.**
Service Limit: 18.030 mm (0.7098 in)

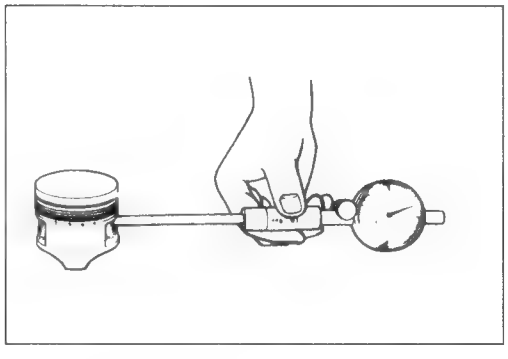

Measure the piston pin outside diameter at three positions using the micrometer. If any of the measurements are out of specification, replace the piston pin.

TOOL **09900-20205: Micrometer (0 – 25 mm)**

DATA **Piston pin O.D.**
Service Limit: 17.980 mm (0.7079 in)

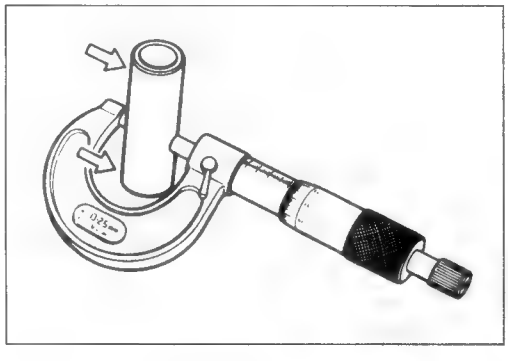

PISTON RING INSTALLATION

- Install the oil ring first, then the 2nd ring and finally the 1st ring.

NOTE:
The 1st ① and 2nd piston rings ② differ in shape.

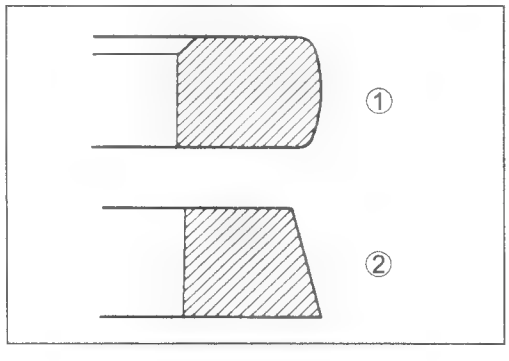

- The 1st ① and 2nd ② piston rings should be installed with the mark facing up.

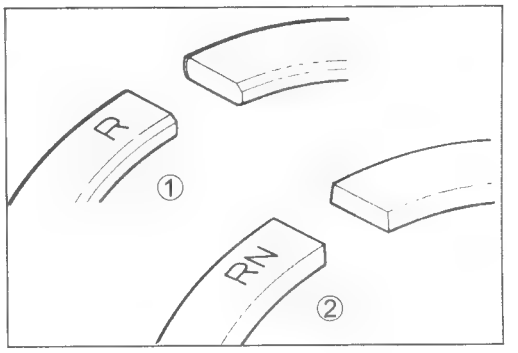

- First, install a spacer ③ into the oil ring groove and then install the two side rails ④. The spacer and side rails do not have a designated top and bottom. They can be installed in any position.

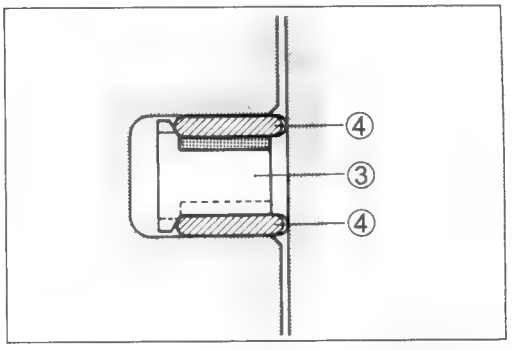

⚠ CAUTION

When installing the spacer, be careful not to allow its two ends to overlap in the groove.

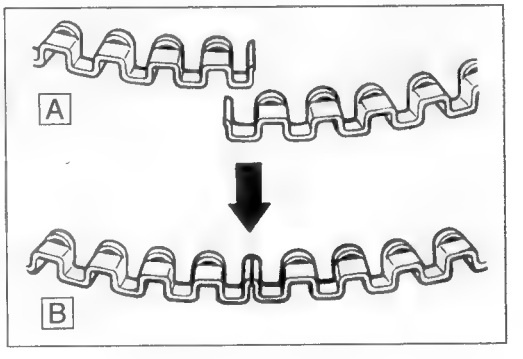

A INCORRECT
B CORRECT

- Position the piston ring gaps as shown. Before inserting each piston into its cylinder, check that the gaps are properly positioned.

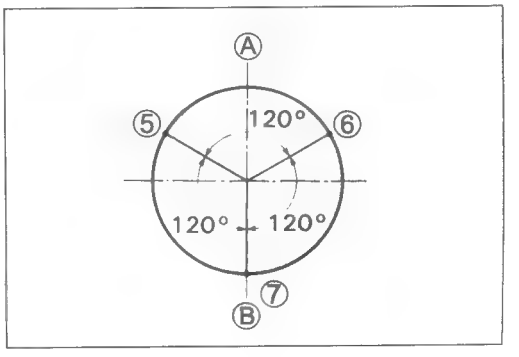

Ⓐ Exhaust side
Ⓑ Intake side
⑤ 2nd ring and lower side rail
⑥ Upper side rail
⑦ 1st ring and spacer

NOTE:
Install the pistons with the arrow mark facing towards the exhaust side.

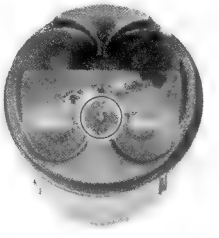

CLUTCH/CLUTCH RELEASE ASSEMBLY INSPECTION

CLUTCH DRIVE PLATES

NOTE:
Wipe off any engine oil from the clutch drive plates using a clean rag.

Measure the thickness of the clutch drive plates using vernier calipers.
If a clutch drive plate thickness is thinner than the service limit, replace the clutch plates as a set.

TOOL 09900-20102: Vernier calipers

DATA Clutch drive plate thickness
Standard: 2.92 – 3.08 mm (0.115 – 0.121 in)
Service Limit: 2.62 mm (0.103 in)

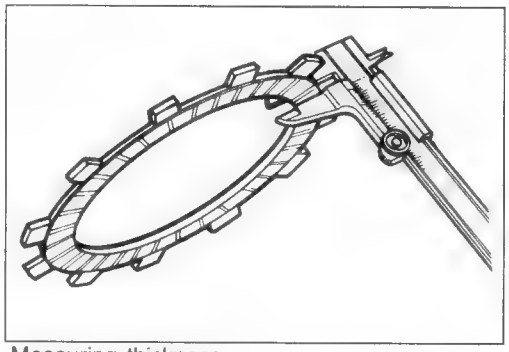
Measuring thickness

Measure the claw width of the clutch drive plates using vernier calipers. If a clutch drive plate claw width is less than the service limit, replace the clutch plates as a set.

TOOL 09900-20102: Vernier calipers

DATA Clutch drive plate claw width
Service Limit: 15.1 mm (0.59 in)

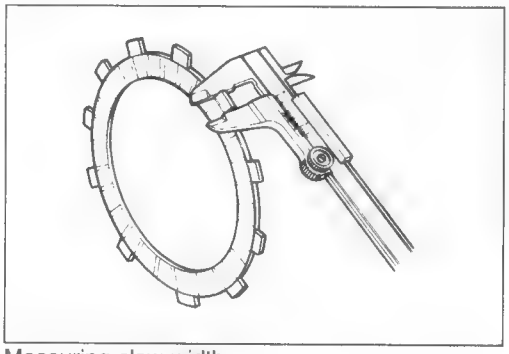
Measuring claw width

CLUTCH DRIVEN PLATES

NOTE:
Wipe off any engine oil from the clutch driven plates using a clean rag.

Measure each clutch driven plate for distortion using the thickness gauge and surface plate.
If a clutch driven plate distortion exceeds the service limit, replace the clutch plates as a set.

TOOL 09900-20803: Thickness gauge

DATA Clutch driven plate distortion
Service Limit: 0.1 mm (0.004 in)

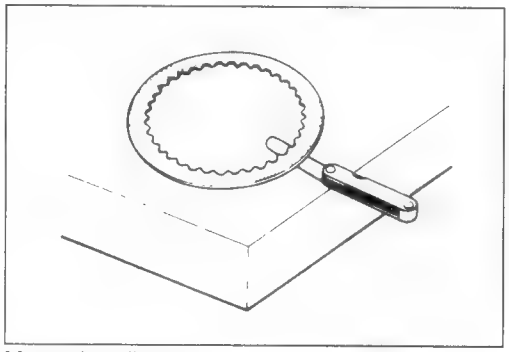
Measuring distortion

CLUTCH SPRING FREE LENGTH

Measure the free length of each clutch spring using vernier calipers. If any spring is shorter than the service limit, replace all of the springs.

TOOL 09900-20102: Vernier calipers

DATA Clutch spring free length
Service Limit: 47.6 mm (1.87 in)

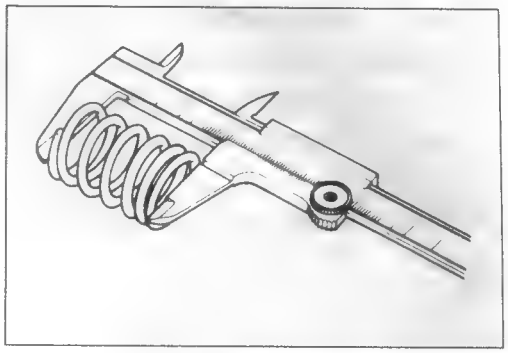

CLUTCH RELEASE BEARING

Inspect the clutch release bearing for any abnormality, especially cracks. When removing the bearing from the clutch, decide whether it can be reused or if it should be replaced.
Smooth engagement and disengagement of the clutch depends on the condition of this bearing.

NOTE:
The thrust washer is located between the clutch pressure plate and the clutch release bearing.

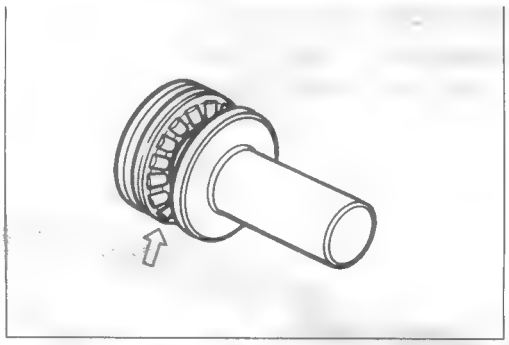

CLUTCH RELEASE ASSEMBLY

Before removing the clutch release assembly, operate the clutch lever by hand to inspect it for a smooth movement and any abnormal noise. If excessive resistance is felt, clean and apply grease or oil to the clutch release assembly.

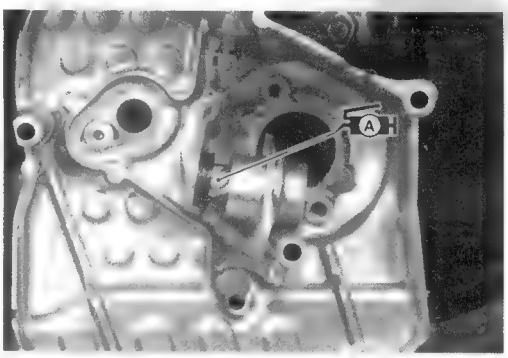

STARTER CLUTCH INSPECTION

STARTER CLUTCH INSPECTION

Install the starter driven gear onto the starter clutch and turn the starter driven gear by hand (the gear turns in only one direction). The starter driven gear should turn smoothly. If excessive resistance is felt while turning the starter driven gear, inspect the starter clutch. Also, inspect the surface of the starter driven gear which contacts the starter clutch, for wear or damage. If any wear or damage is found, replace the defective part(-s).

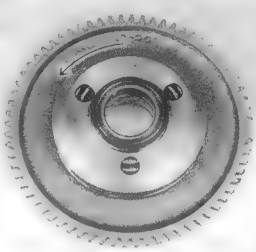

STARTER DRIVEN GEAR BEARING INSPECTION

Inspect the starter driven gear bearing for wear or damage.

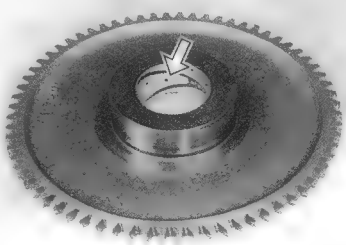

GEARSHIFT LINKAGE INSPECTION

GEARSHIFT SHAFT/GEARSHIFT ARM INSPECTION

Check the gearshift shaft/gearshift arm for bends or wear.
Check the return spring on the gearshift arm for damage or fatigue.
If any defects are found, replace the defective part(-s).

OIL SEAL INSPECTION

Inspect the gearshift shaft oil seal's lip for damage or wear.
If any defects are found, replace the oil seal with a new one.

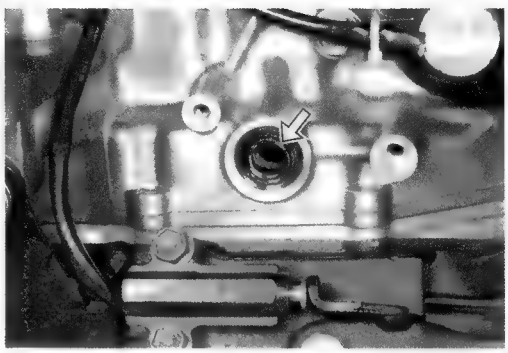

OIL SEAL REPLACEMENT

- Remove the gearshift shaft oil seal from the lower crankcase.

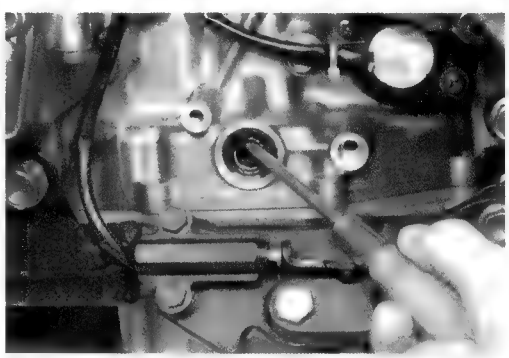

- Install the new oil seal using the special tool.

TOOL 09943-88211: Pinion bearing installer

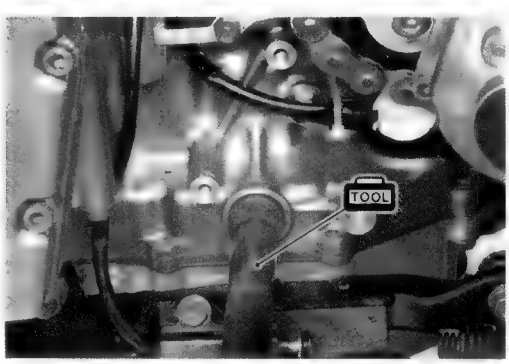

⚠ CAUTION

The removed oil seal must be replaced with a new one.

NOTE:
Apply SUZUKI SUPER GREASE "A" onto the oil seal lip to prevent oil seal damage when installing the lower crankcase.

A 99000-25010: SUZUKI SUPER GREASE "A"

GEARSHIFT SHAFT HOLE INSPECTION

Check the gearshift shaft hole for damage or wear.

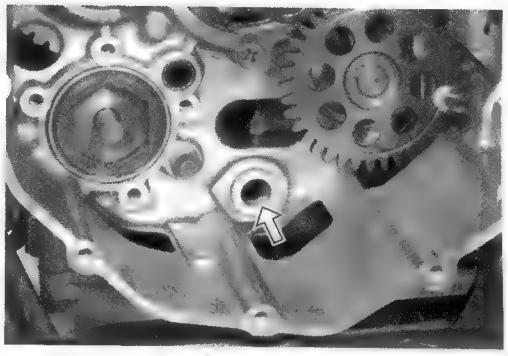

GEARSHIFT SHAFT REASSEMBLY

When installing the gearshift shaft return spring, position the stopper between the ends of the gearshift shaft return spring.

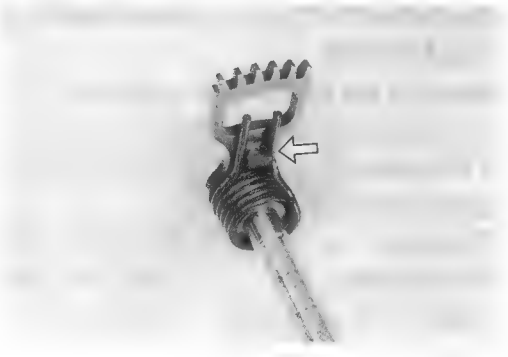

TRANSMISSION INSPECTION AND SERVICE

⚠ CAUTION

Identify the position of each removed part. Organize the parts in their respective groups (i.e., drive or driven) so that they can be reinstalled in their original positions.

GEARSHIFT FORK-TO-GEARSHIFT FORK GROOVE CLEARANCE

Measure the gearshift fork clearance in the groove of its respective gear using the thickness gauge.
If the clearance exceeds the specification, replace the fork, its respective gear or both.
The clearance for each of the three gearshift forks plays an important role in the smoothness and positiveness of the shifting action.

TOOL **09900-20803: Thickness gauge**
09900-20102: Vernier calipers

DATA **Gearshift fork-to-gearshift fork groove clearance**
Standard: 0.10 – 0.30 mm (0.004 – 0.012 in)
Service Limit: 0.50 mm (0.020 in)

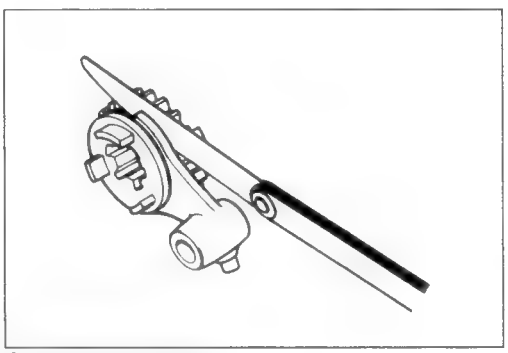
Checking clearance

DATA **Gearshift fork groove width**
Standard (#1 & #3) : 4.80 – 4.90 mm (0.189 – 0.193 in)
(#2) : 5.00 – 5.10 mm (0.197 – 0.201 in)

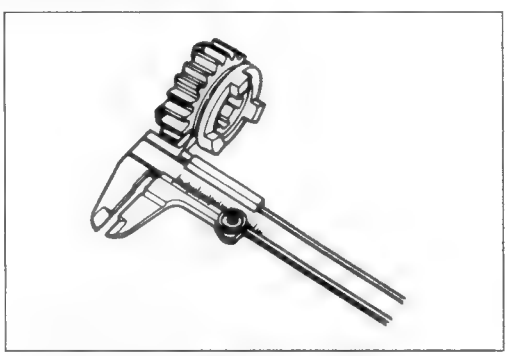
Checking groove width

DATA **Gearshift fork thickness**
Standard (#1 & #3) : 4.60 – 4.70 mm (0.181 – 0.185 in)
(#2) : 4.80 – 4.90 mm (0.189 – 0.193 in)

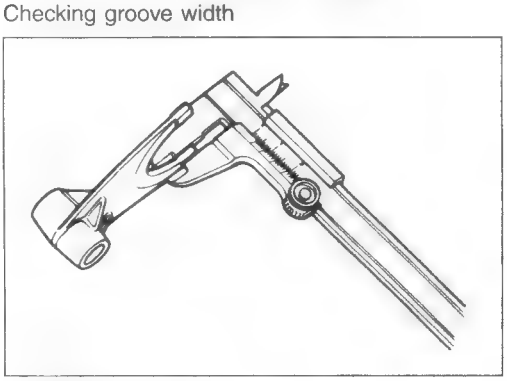
Checking thickness

DISASSEMBLY

Countershaft assembly

- Remove the left end bearing ① and oil seal ②.

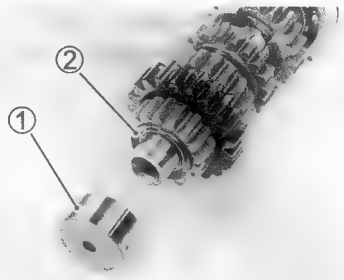

- Remove the 6th (top) drive gear circlip ③ from its groove and slide it towards the 3rd/4th drive gears ④.

09900-06107: Snap ring pliers

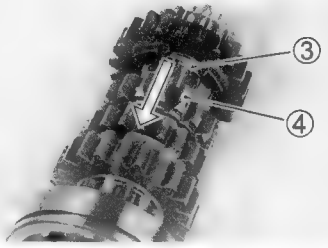

- Slide the 6th (top) and 2nd drive gears toward the 3rd/4th drive gears, then remove the 2nd drive gear circlip ⑤.
- Remove the 2nd, 6th (top), washer, circlip and 3rd/4th drive gears.

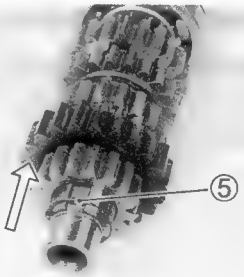

- Remove the circlip, 5th drive gear bushing ⑥ and the 5th drive gear ⑦.

09900-06107: Snap ring pliers

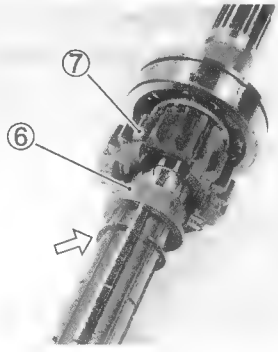

Driveshaft assembly

- Remove the right end bearing ①, washer and 1st (low) driven gear ②.

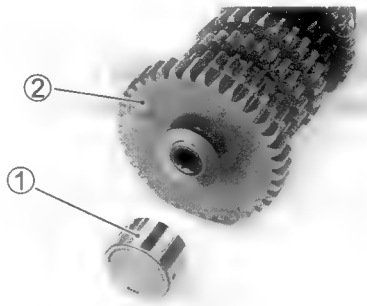

- Remove the 1st (low) driven gear bushing ③, washer and the 5th driven gear ④.

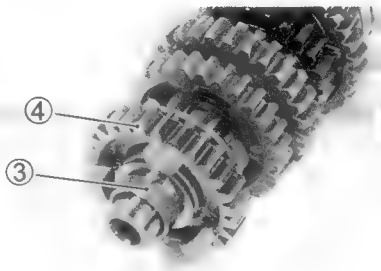

- Remove the circlip, washer and 4th driven gear ⑤.

TOOL **09900-06107: Snap ring pliers**

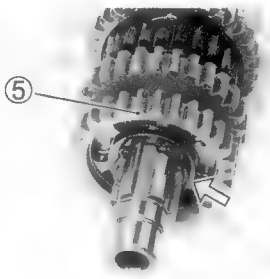

- Remove the 4th driven gear bushing ⑥, lock washers, 3rd driven gear ⑦, 3rd driven gear bushing ⑧ and washer.

- Remove the circlip and 6th (top) driven gear ⑨.

TOOL **09900-06107: Snap ring pliers**

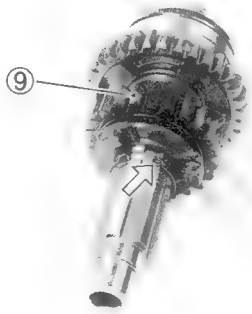

- Remove the circlip, washer and 2nd driven gear ①.

09900-06107: Snap ring pliers

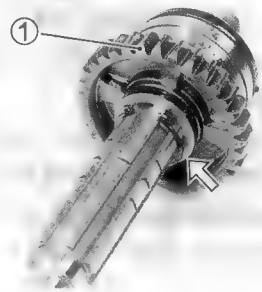

- Remove the 2nd driven gear bushing ②.

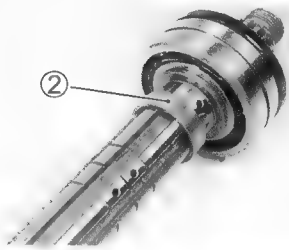

- Remove the oil seal ③.

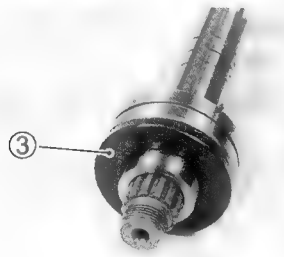

REASSEMBLY

Assemble the countershaft and driveshaft assemblies in the reverse order of disassembly. Pay attention to the following points:

NOTE:

* *Before installing the gears, rotate the bearing by hand to inspect for abnormal noises and smooth rotation. Replace the bearing if there is anything unusual.*
* *Before installing the gears, lightly coat the driveshaft, countershaft and bushings with molybdenum oil solution.*
* *Before installing the oil seal, apply SUZUKI SUPER GREASE "A" to the oil seal lip.*

99000-25140: SUZUKI MOLY PASTE

99000-25010: SUZUKI SUPER GREASE "A"

⚠ CAUTION

*** Never reuse a circlip. After a circlip has been removed from a shaft, it should be discarded and a new circlip must be installed.**
*** When installing a new circlip, do not expand the end gap larger than required to slip the circlip over the shaft.**
*** After installing a circlip, make sure that it is completely seated in its groove and securely fitted.**

NOTE:
When reassembling the transmission, attention must be given to the locations and positions of washers and circlips. The cross sectional view shows the correct position of the gears, bushings, washers and circlips.
(☞3-77)

- When installing a new circlip, pay attention to the direction of the circlip. Fit the circlip to the side where the thrust is, as shown. The rounded side should be against the gear surface.

Ⓐ Thrust
Ⓑ Sharp edge

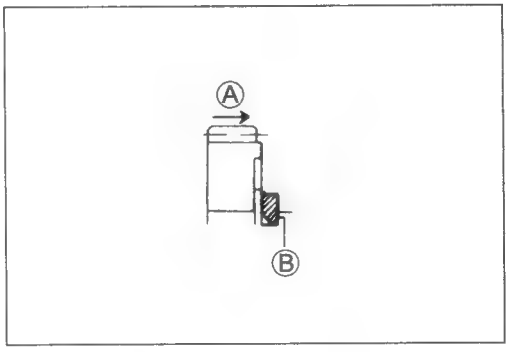

⚠ CAUTION

When installing the 3rd and 4th driven gear bushings onto the driveshaft, align the driveshaft oil hole ① with the bushing oil hole ②.

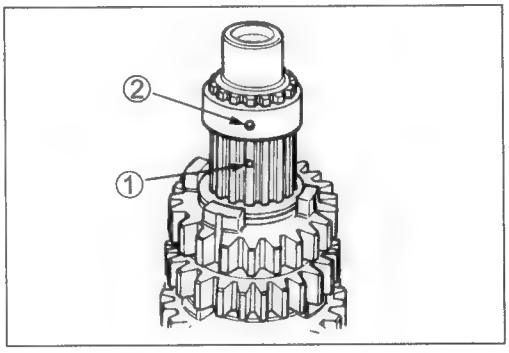

- After installing the 3rd driven gear onto the driveshaft, install lock washer #2 ③ onto the driveshaft, and position it so it fits into the groove.
- Then, fit lock washer #1 ④ into lock washer #2 ③.

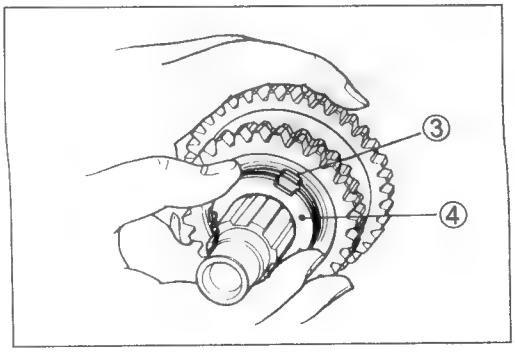

⚠ CAUTION

Install the oil seal as shown in the illustration.

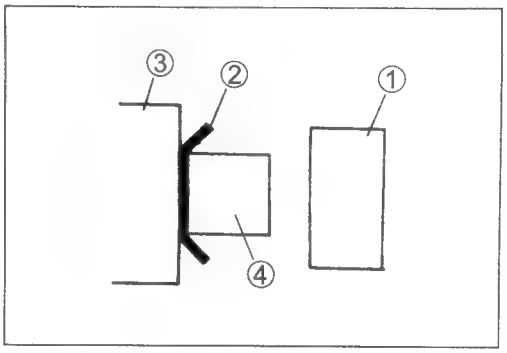

① Left end bearing
② Oil seal
③ 2nd drive gear
④ Countershaft

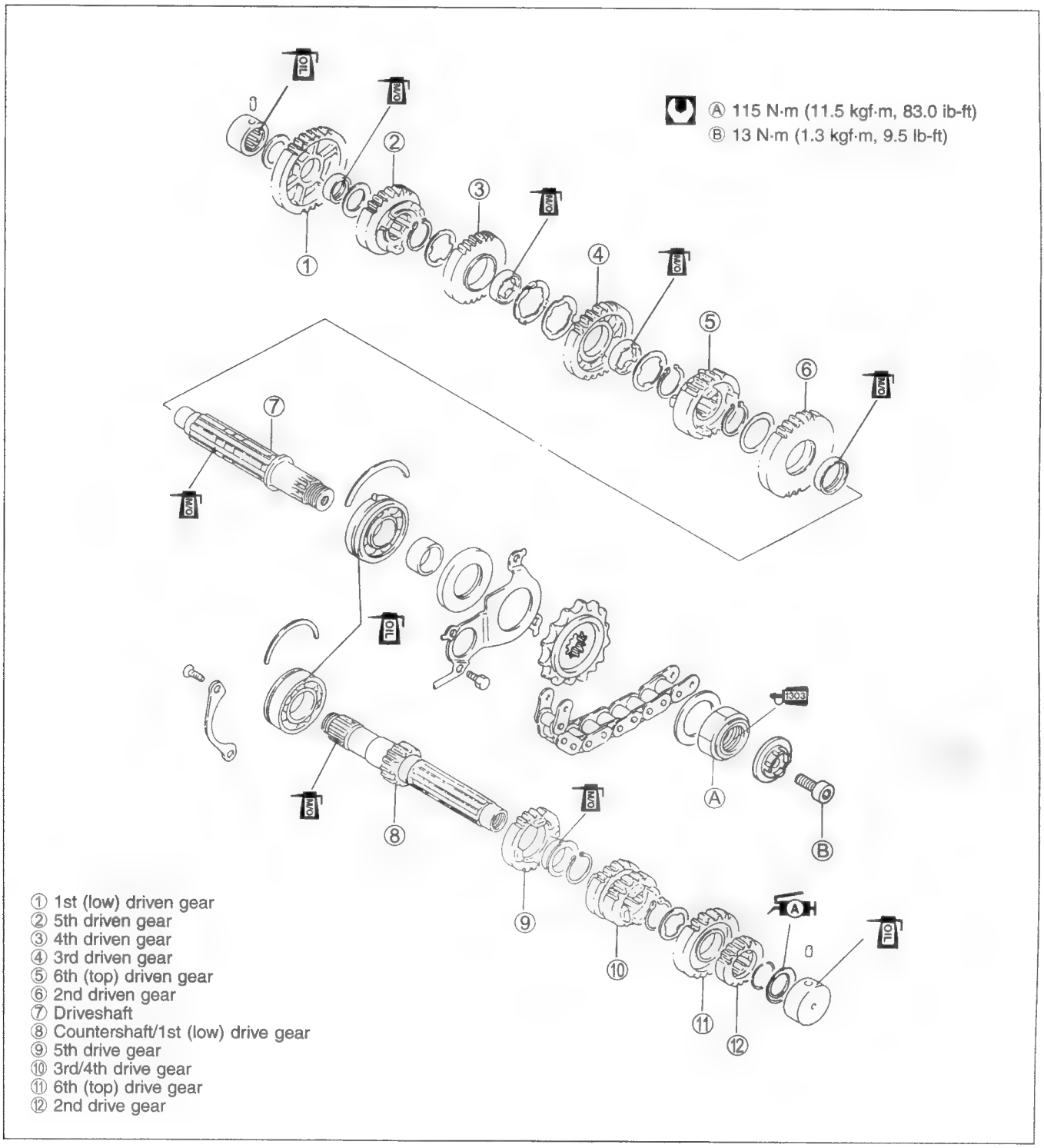

① 1st (low) driven gear
② 5th driven gear
③ 4th driven gear
④ 3rd driven gear
⑤ 6th (top) driven gear
⑥ 2nd driven gear
⑦ Driveshaft
⑧ Countershaft/1st (low) drive gear
⑨ 5th drive gear
⑩ 3rd/4th drive gear
⑪ 6th (top) drive gear
⑫ 2nd drive gear

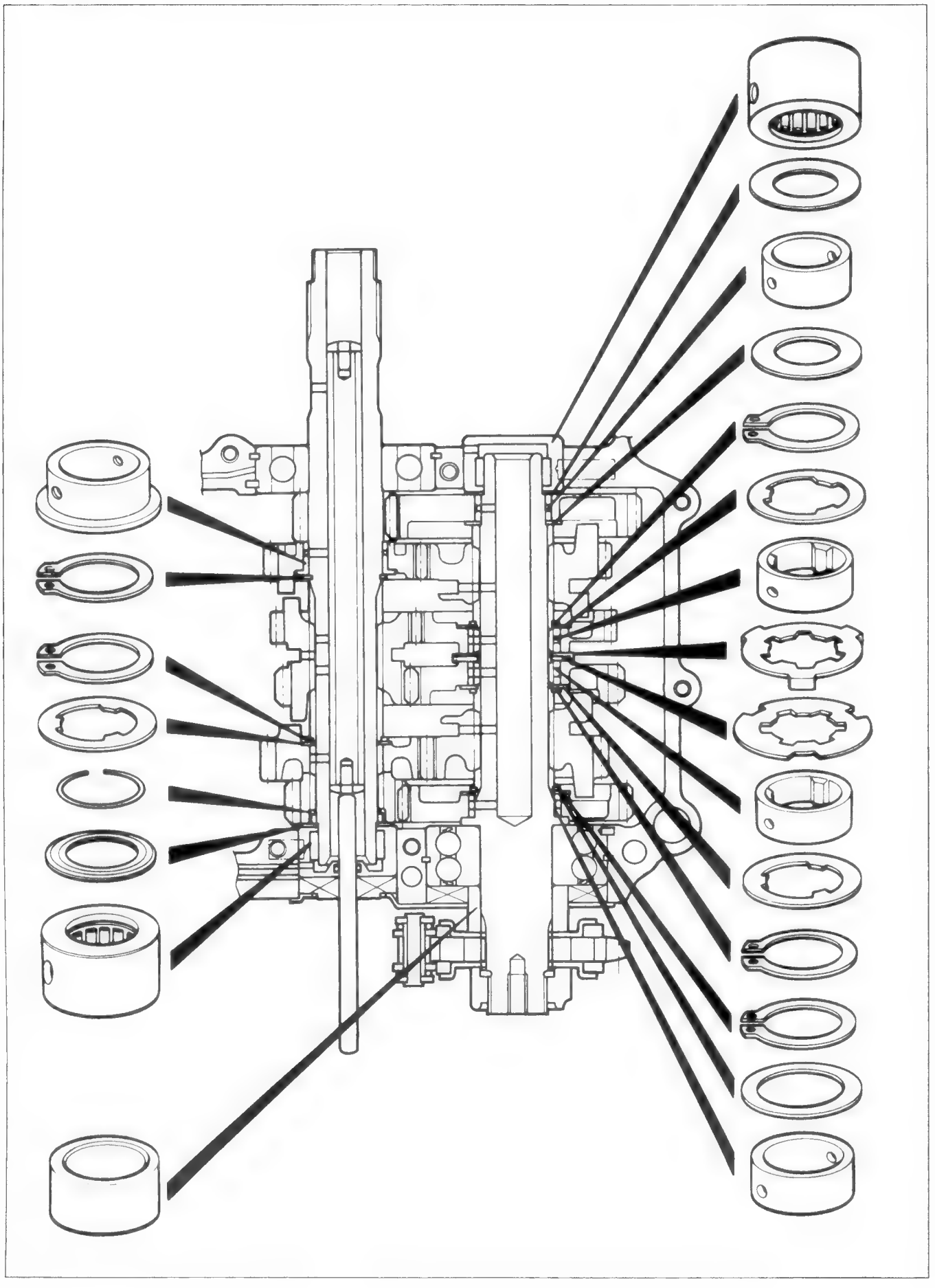

CONROD/CRANKSHAFT INSPECTION

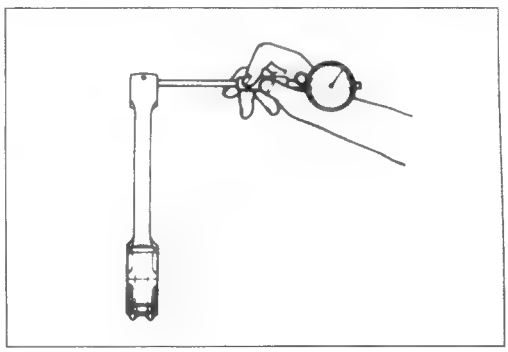

CONROD SMALL END I.D.

Measure the conrod small end inside diameter using the small bore gauge.
If the conrod small end inside diameter exceeds the service limit, replace the conrod.

TOOL **09900-20602: Dial gauge (1/1000 mm)**
09900-22403: Small bore gauge (18 – 35 mm)

DATA **Conrod small end I.D.**
Service Limit: 18.040 mm (0.7102 in)

CONROD BIG END SIDE CLEARANCE

Check the conrod big end side clearance using the thickness gauge. If the clearance exceeds the limit, measure the conrod big end width and crank pin width.
If any of the measurements are out of specification, replace the defective part(-s).

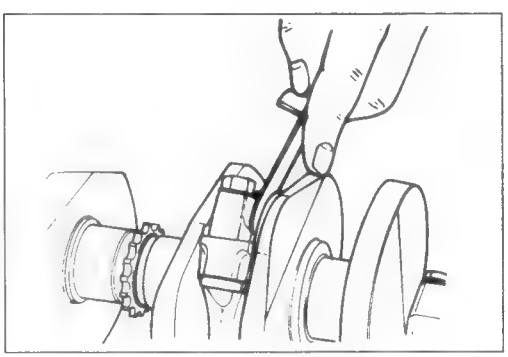

TOOL **09900-20803: Thickness gauge**

DATA **Conrod big end side clearance**
Service Limit: 0.3 mm (0.01 in)

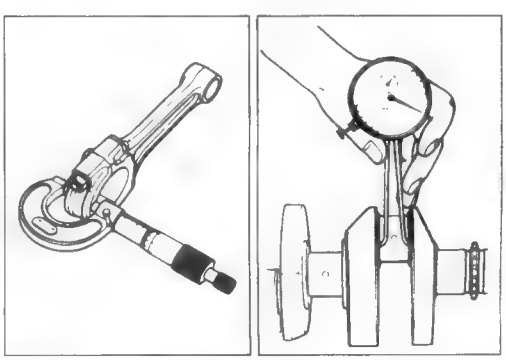

TOOL **09900-20205: Micrometer (0 – 25 mm)**
09900-20605: Dial calipers (10 – 34 mm)

DATA **Conrod big end width**
Standard: 20.95 – 21.00 mm (0.825 – 0.827 in)

DATA **Crank pin width**
Standard: 21.10 – 21.15 mm (0.831 – 0.833 in)

CONROD-CRANK PIN BEARING INSPECTION AND SERVICE

CONROD-CRANK PIN BEARING INSPECTION

- Loosen the bearing cap nuts and tap the bearing cap nut lightly using a plastic hammer to remove the bearing cap.

- Remove the conrods and mark them to identify their respective cylinders.
- Inspect the bearing surfaces for any signs of fusion, pitting, burns, or flaws. If there is any damage, replace them with the specified set of bearings.

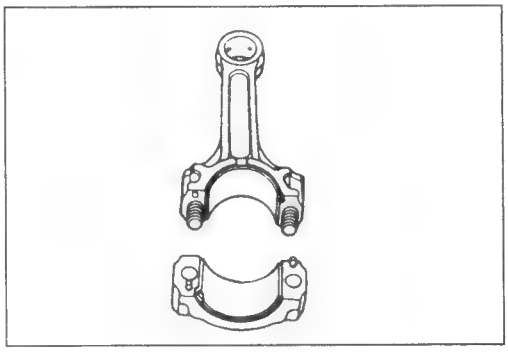

CONROD-CRANK PIN BEARING SELECTION

- Place the plastigauge axially along the crank pin, avoiding the oil hole, as shown.
- Tighten the conrod cap nuts to the specified torque, in two stages.

NOTE:
When installing the bearing cap to the crank pin, make sure that the number ① on the conrod faces towards the intake side.

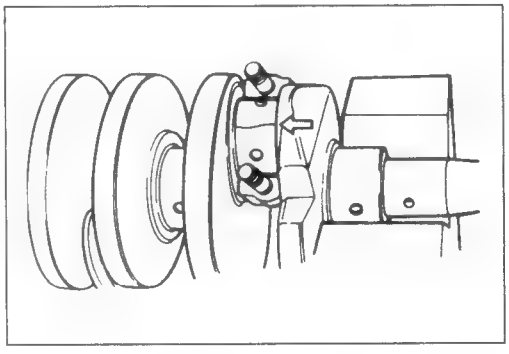

Conrod cap nut
(Initial): 20 N·m (2.0 kgf·m, 14.5 lb-ft)
(Final): 35 N·m (3.5 kgf·m, 25.5 lb-ft)

09900-22301: Plastigauge

NOTE:
Never rotate the crankshaft or conrod when a piece of plastigauge is installed.

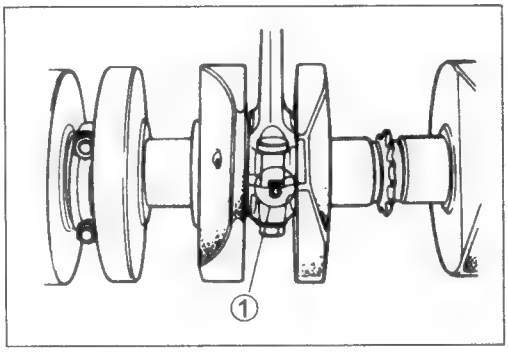

- Remove the bearing caps, and measure the width of the compressed plastigauge using the envelope scale. This measurement should be taken at the widest part of the compressed plastigauge.

Conrod big end oil clearance
Standard: 0.032 – 0.056 mm (0.0013 – 0.0022 in)

Conrod big end oil clearance
Service Limit: 0.080 mm (0.0031 in)

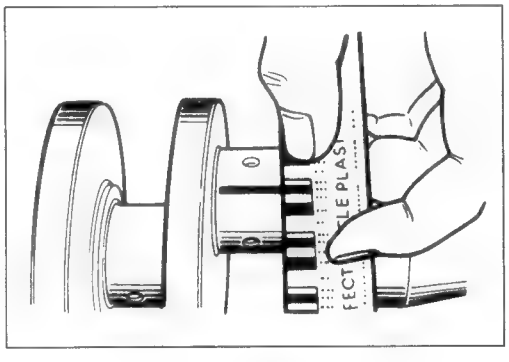

- If the oil clearance exceeds the service limit, select the specified bearings from the bearing selection table.
- Check the corresponding conrod I.D. code numbers ("1" or "2") ②.

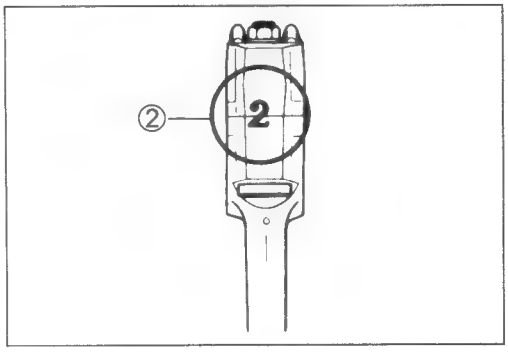

- Check the corresponding crank pin O.D. code numbers ("1", "2" or "3") ③.

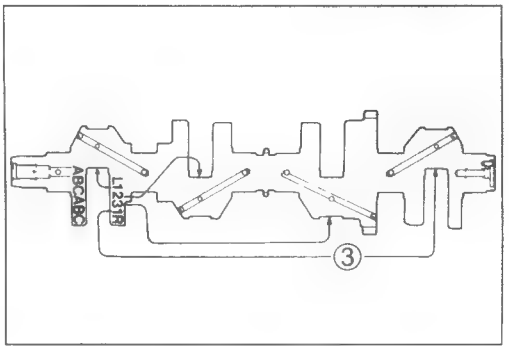

Bearing selection table

		Crank pin O.D. ③		
	Code	1	2	3
Conrod I.D. ②	1	Green	Black	Brown
	2	Black	Brown	Yellow

Conrod I.D. specification

Code	I.D. specification
1	37.000 – 37.008 mm (1.4567 – 1.4570 in)
2	37.008 – 37.016 mm (1.4570 – 1.4573 in)

Crank pin O.D. specification

Code	O.D. specification
1	33.992 – 34.000 mm (1.3383 – 1.3386 in)
2	33.984 – 33.992 mm (1.3380 – 1.3383 in)
3	33.976 – 33.984 mm (1.3376 – 1.3380 in)

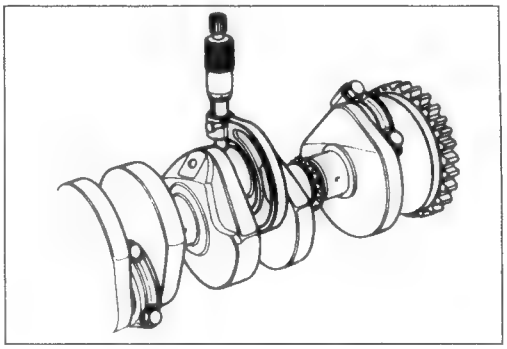

TOOL **09900-20202: Micrometer (25 – 50 mm)**

Bearing thickness specification

Color (Part No.)	Thickness
Green (12164-26E00-0A0)	1.480 – 1.484 mm (0.0583 – 0.0584 in)
Black (12164-26E00-0B0)	1.484 – 1.488 mm (0.0584 – 0.0586 in)
Brown (12164-26E00-0C0)	1.488 – 1.492 mm (0.0586 – 0.0587 in)
Yellow (12164-26E00-0D0)	1.492 – 1.496 mm (0.0587 – 0.0589 in)

Ⓐ Color code

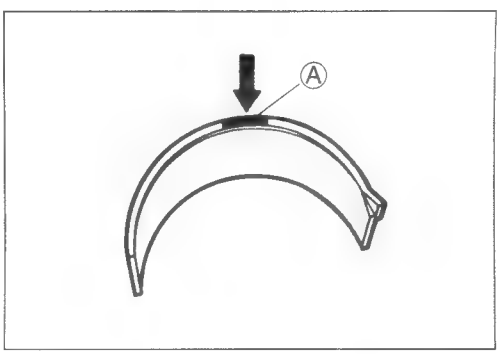

⚠ CAUTION

The bearings should be replaced as a set.

BEARING ASSEMBLY

- When installing the bearings into the bearing cap and conrod, be sure to install the tab ① first, and then press in the opposite side of the bearing.

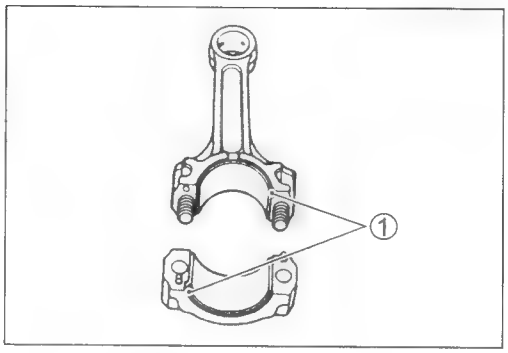

- Apply molybdenum oil solution to the crank pin and bearing surface.

99000-25140: SUZUKI MOLY PASTE

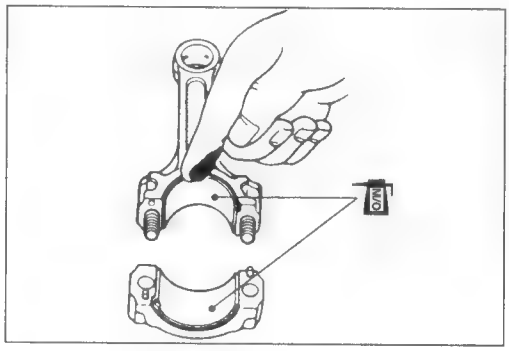

- When mounting the conrod on the crankshaft, make sure that the numbers ① on the conrod faces towards the intake side.
- Tighten the conrod cap nuts to the specified torque.

Conrod cap nut
(Initial): 20 N·m (2.0 kgf·m, 14.5 lb-ft)
(Final): 35 N·m (3.5 kgf·m, 25.5 lb-ft)

- Check that the conrod moves smoothly.

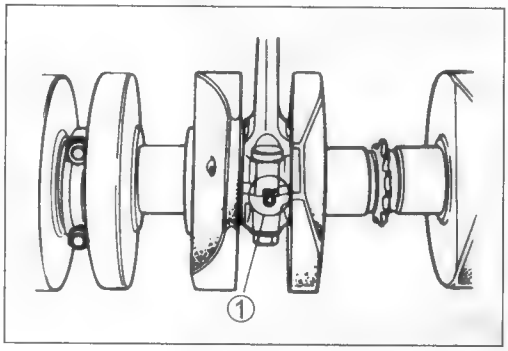

CRANKCASE-CRANKSHAFT BEARING INSPECTION AND SERVICE

CRANKCASE-CRANKSHAFT BEARING INSPECTION

- Inspect each upper and lower crankcase bearing for any damage.

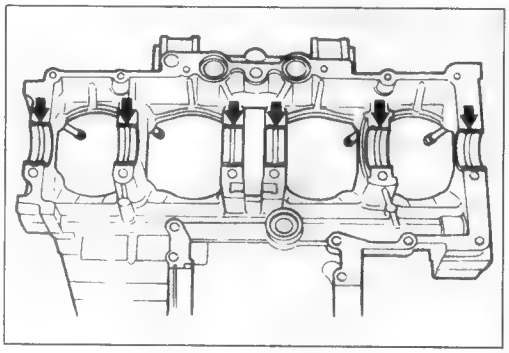

CRANKCASE-CRANKSHAFT BEARING SELECTION

- Install the plastigauge onto each crankshaft journal as shown.

09900-22301: Plastigauge

NOTE:
Do not place the plastigauge on the oil hole and do not rotate the crankshaft when a piece of plastigauge is installed.

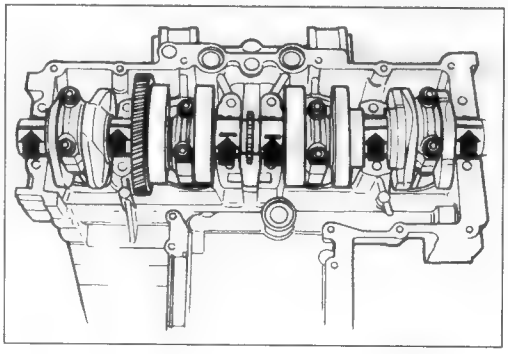

- Mate the lower crankcase with the upper crankcase and tighten the crankshaft bolts to the specified torque and in the proper tightening sequence.

Crankcase bolt
(Initial): 13 N·m (1.3 kgf·m, 9.5 lb-ft)
(Final): 23 N·m (2.3 kgf·m, 16.5 lb-ft)

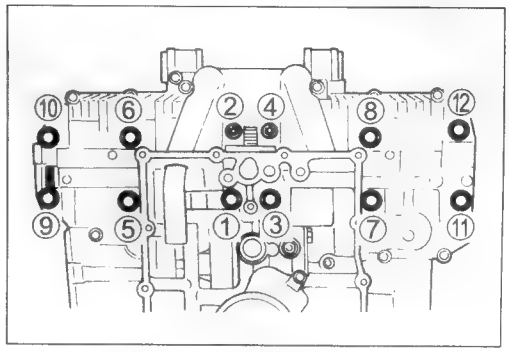

- Remove the lower crankcase and measure the width of compressed plastigauge using the envelope scale. This measurement should be taken at the widest part of the compressed plastigauge.

DATA Crankshaft journal oil clearance
Standard: 0.020 – 0.044 mm (0.0008 – 0.0017 in)

DATA Crankshaft journal oil clearance
Service Limit: 0.08 mm (0.0031 in)

- If the width at the widest part of the compressed plastigauge exceeds the limit, replace the set of bearings with new ones. Refer to the selection table.

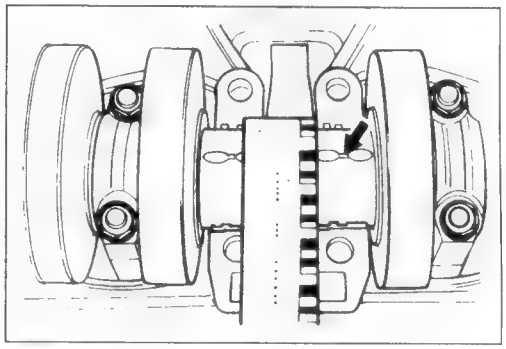

- Check the corresponding crankcase journal I.D. codes ("A" or "B") ①, which are stamped on the rear of the upper crankcase.

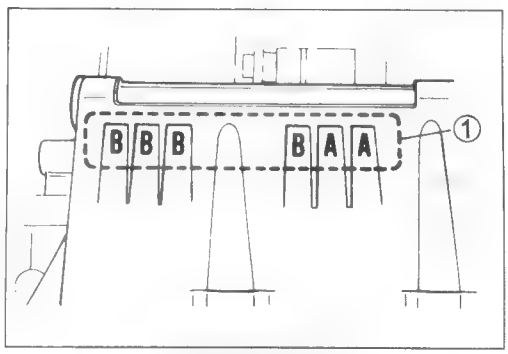

- Check the corresponding crankshaft journal O.D. codes ("A", "B" or "C") ②, which are stamped on the crankshaft.

Bearing selection table

		Crankshaft O.D. ②		
	Code	A	B	C
Crankcase I.D. ①	A	Green	Black	Brown
	B	Black	Brown	Yellow

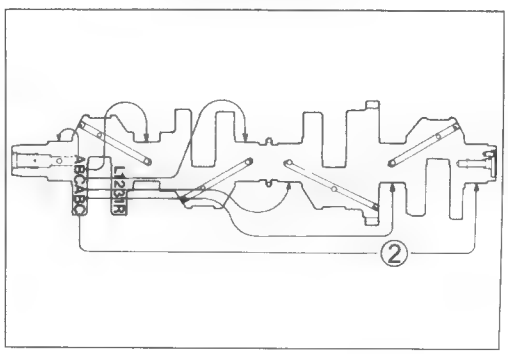

Crankcase journal I.D. specification

Code	I.D. specification
A	35.000 – 35.008 mm (1.3780 – 1.3783 in)
B	35.008 – 35.016 mm (1.3783 – 1.3786 in)

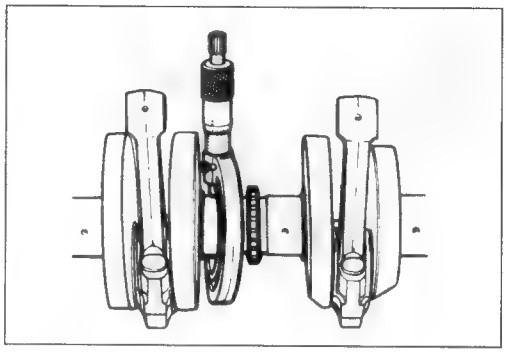

Crankshaft journal O.D. specification

Code	O.D. specification
A	31.992 – 32.000 mm (1.2595 – 1.2598 in)
B	31.984 – 31.992 mm (1.2592 – 1.2595 in)
C	31.976 – 31.984 mm (1.2589 – 1.2592 in)

TOOL **09900-20202: Micrometer (25 – 50 mm)**

Bearing thickness specification

Color (Part No.)	Thickness
Green (12229-27A00-0A0) ... ① (12229-27A10-0A0) ... ②	1.486 – 1.490 mm (0.0585 – 0.0587 in)
Black (12229-27A00-0B0) ... ① (12229-27A10-0B0) ... ②	1.490 – 1.494 mm (0.0587 – 0.0588 in)
Brown (12229-27A00-0C0) ... ① (12229-27A10-0C0) ... ②	1.494 – 1.498 mm (0.0588 – 0.0590 in)
Yellow (12229-27A00-0D0) ... ① (12229-27A10-0D0) ... ②	1.498 – 1.502 mm (0.0590 – 0.0591 in)

① Grooved bearing with oil hole (for lower crankcase)
② Grooved bearing (for upper crankcase)
③ Color code

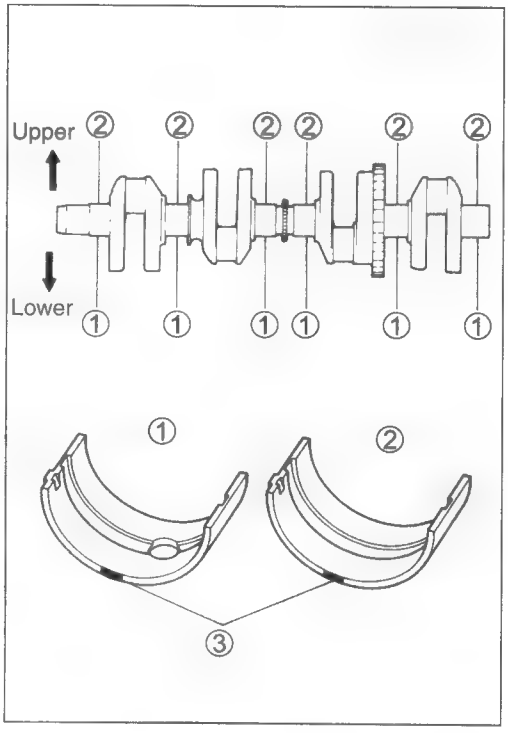

CRANKSHAFT THRUST CLEARANCE ADJUSTMENT

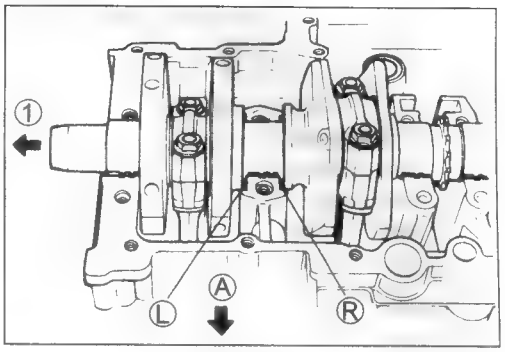

- With the crankshaft's right-side and left-side thrust bearings inserted into the upper crankcase, measure the thrust clearance between the left-side thrust bearing and the crankshaft using the thickness gauge.

Ⓡ: Right-side thrust bearing
Ⓛ: Left-side thrust bearing
Ⓐ: Front

NOTE:
Pull ① the crankshaft to the left so that there is no clearance on the right-side thrust bearing.

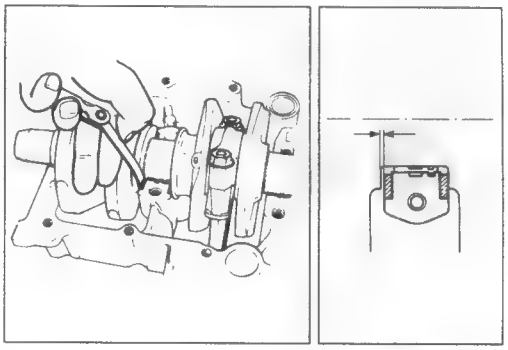

DATA **Crankshaft thrust clearance**
Standard: 0.04 – 0.09 mm (0.002 – 0.004 in)

If the thrust clearance exceeds the standard range, adjust the thrust clearance as follows:

- Remove the right-side thrust bearing and measure its thickness using the micrometer. If the thickness of the right-side thrust bearing is below standard, replace it with a new bearing and measure the thrust clearance again, as described above.

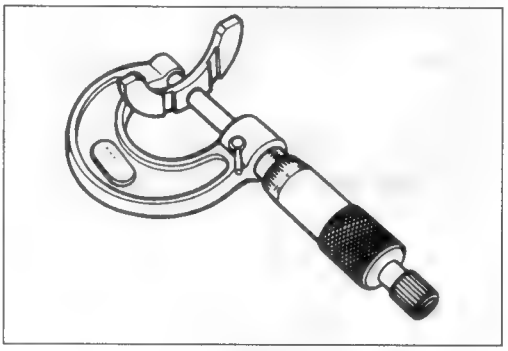

DATA **Right-side thrust bearing thickness**
Standard: 2.425 – 2.450 mm (0.0955 – 0.0965 in)

- If the right-side thrust bearing is within the standard range, reinsert the right-side thrust bearing and remove the left-side thrust bearing.
- With the left-side thrust bearing removed, measure the clearance using the thickness gauge as shown. Then, select a left-side thrust bearing from the selection table. (☞3-86)

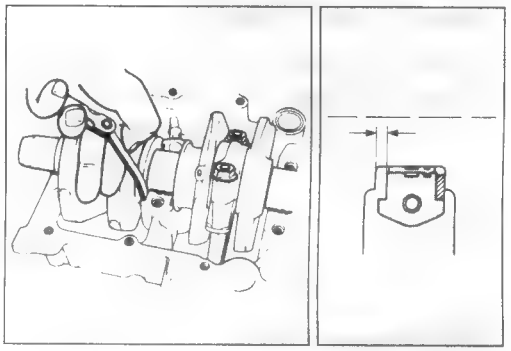

Left-side thrust bearing selection table

Clearance before inserting the left-side thrust bearing	Color ① (Part No.)	Thrust bearing thickness	Thrust clearance
2.415 – 2.440 mm (0.0951 – 0.0961 in)	Red (12228-43411)	2.350 – 2.375 mm (0.0925 – 0.0935 in)	0.04 – 0.09 mm (0.002 – 0.004 in)
2.440 – 2.465 mm (0.0961 – 0.0970 in)	Black (12228-43412)	2.375 – 2.400 mm (0.0935 – 0.0945 in)	
2.465 – 2.490 mm (0.0970 – 0.0980 in)	Blue (12228-43413)	2.400 – 2.425 mm (0.0945 – 0.0955 in)	
2.490 – 2.515 mm (0.0980 – 0.0990 in)	Green (12228-43414)	2.425 – 2.450 mm (0.0955 – 0.0965 in)	
2.515 – 2.540 mm (0.0990 – 0.1000 in)	Yellow (12228-43415)	2.450 – 2.475 mm (0.0965 – 0.0974 in)	
2.540 – 2.565 mm (0.1000 – 0.1010 in)	White (12228-43416)	2.475 – 2.500 mm (0.0974 – 0.0984 in)	

- After selecting a left-side thrust bearing, install it and then measure the thrust clearance again.

NOTE:
The right-side thrust bearing color code ① and part number are as follows. GREEN (12228-43414).

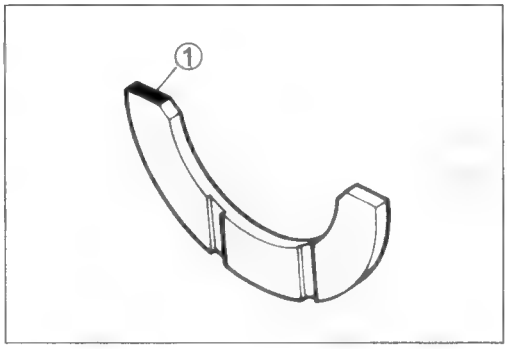

CRANKSHAFT RUNOUT

Support the crankshaft using V-blocks as shown, with the two end journals resting on the blocks. Set up the dial gauge as shown, and rotate the crankshaft slowly to read the runout. Replace the crankshaft if the runout exceeds the service limit.

TOOL **09900-20606: Dial gauge (1/100 mm)**
09900-20701: Magnetic stand
09900-21304: V-block set (100 mm)

DATA **Crankshaft runout**
Service Limit: 0.05 mm (0.002 in)

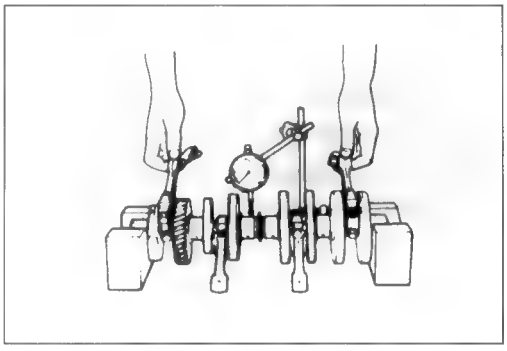

ENGINE LUBRICATION SYSTEM

OIL PUMP

REMOVAL

The crankcase must be separated to service the oil pump.
The oil pump service requires engine removal and disassembly. Refer to the engine removal and the engine disassembly sections for oil pump removal. (☞3-25)

INSPECTION

Rotate the oil pump by hand and check that it moves smoothly. If it does not move smoothly, replace the oil pump assembly.

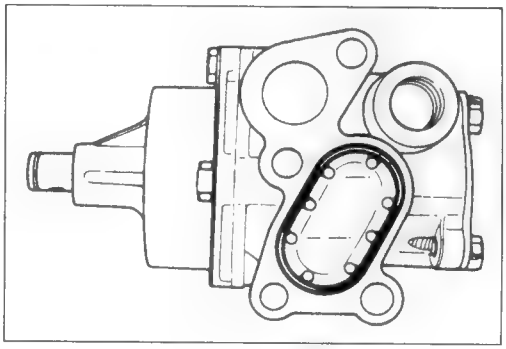

⚠ CAUTION

Do not attempt to disassemble the oil pump assembly. The oil pump is available only as an assembly.

INSTALLATION

- Refer to the engine reassembly and the engine installation sections to install the oil pump. (☞3-26)

OIL SUMP FILTER/OIL PRESSURE REGULATOR

REMOVAL

After draining the engine oil, the following components must be removed in the described order before removing the oil sump filter and the oil pressure regulator.

NOTE:
Refer to the following pages for the details of each step.

Drain:

- Engine oil (☞2-9)

Remove:

- Exhaust pipe/muffler assembly (☞3-6)
- Oil cooler hose union bolts
- Oil pan (☞3-21)

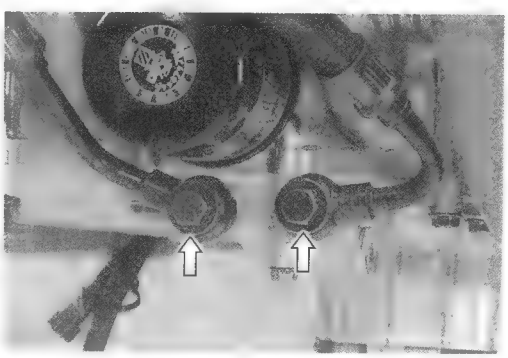

- Oil pressure regulator

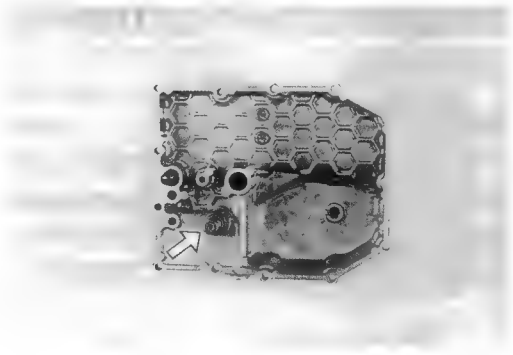

- Oil sump filter

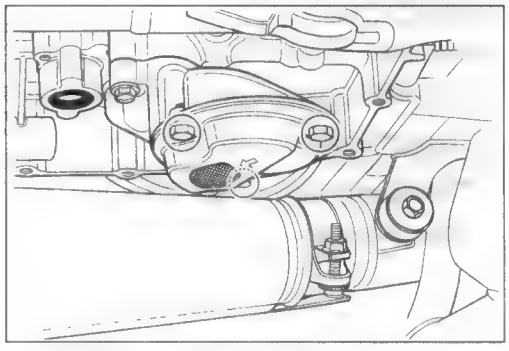

OIL PRESSURE REGULATOR INSPECTION

Check the operation of the oil pressure regulator by pushing on the piston with an appropriately shaped tool. If the piston does not operate, replace the oil pressure regulator with a new one.

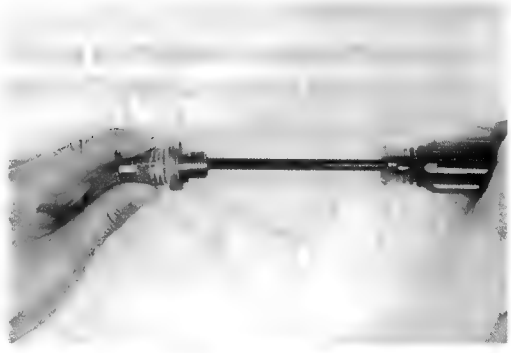

OIL SUMP FILTER CLEANING

Clean the oil sump filter using compressed air.

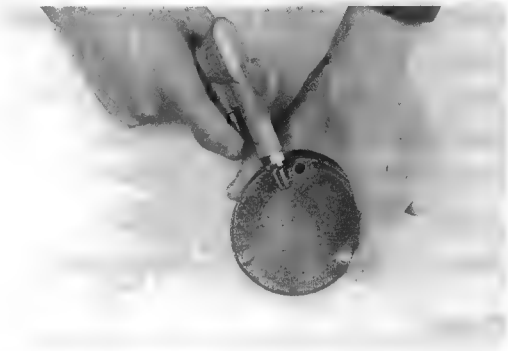

OIL PAN

Wash the oil pan with kerosine.

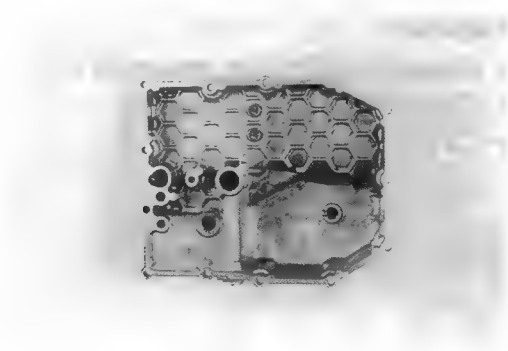

OIL SUMP FILTER/OIL PRESSURE REGULATOR INSTALLATION

Installation is in the reverse order of removal.

NOTE:

Refer to the following pages for the details of each step.

Install:

- Oil sump filter

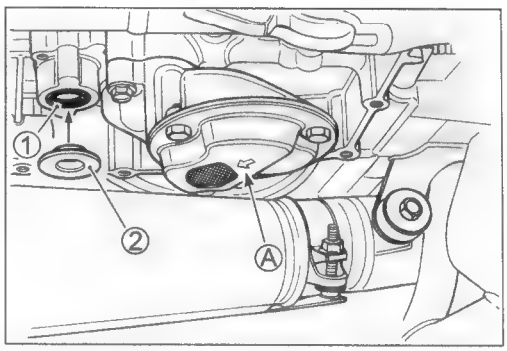

NOTE:

* *When installing the oil sump filter, make sure that the arrow mark Ⓐ points towards the front of the motorcycle.*
* *Do not loose the O-ring ① and shim ②.*

- Oil pressure regulator

Oil pressure regulator: 28 N·m (2.8 kgf·m, 20.0 lb-ft)

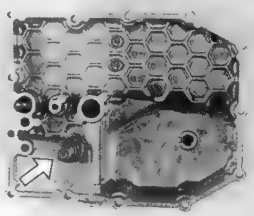

- Oil pan (☞3-32)
- Oil cooler hose union bolts (☞3-9)
- Exhaust pipe/muffler assembly (☞3-9)

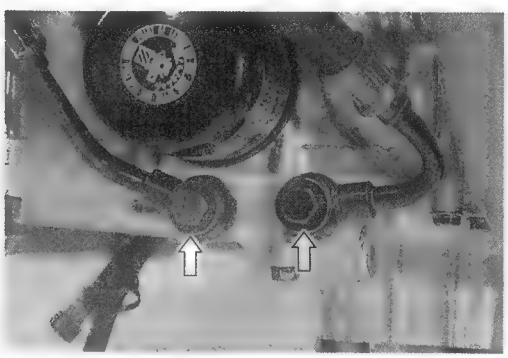

Adjust the following item to specification.

* Engine oil ..... ☞2-9

OIL PRESSURE SWITCH/OIL COOLER

REMOVAL

After draining the engine oil, remove the oil pressure switch and the oil cooler.

NOTE:
Refer to the following pages for the details of each step.

Drain:
- Engine oil (☞2-9)

Remove:
- Signal generator cover.

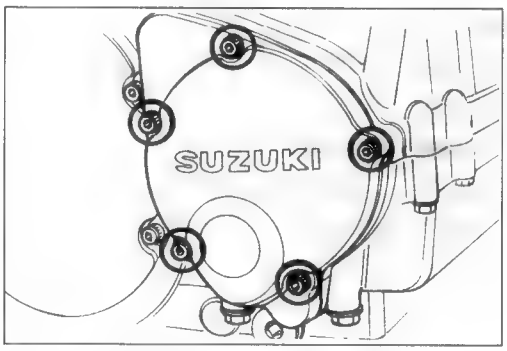

- Oil pressure switch.

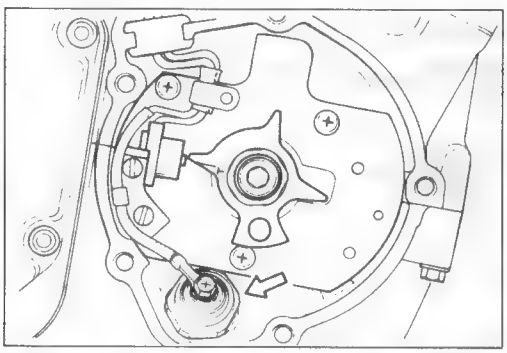

- Oil cooler

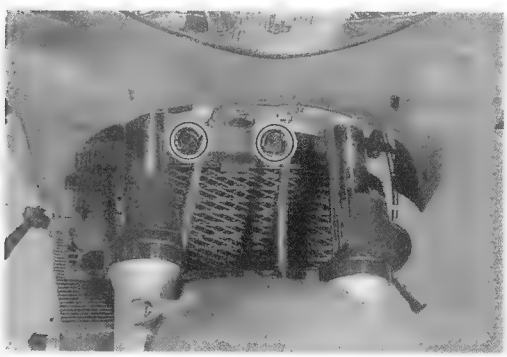

OIL PRESSURE SWITCH INSPECTION

☞6-36

OIL COOLER HOSE INSPECTION

Inspect the oil cooler hoses for damage and oil leaks. If any defects are found, replace the oil cooler hose(-s) with a new one.

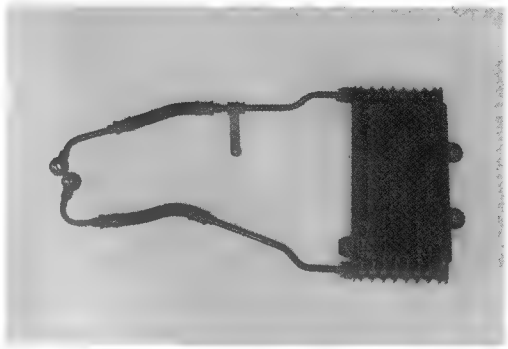

OIL COOLER INSPECTION AND CLEANING

Remove any foreign matter that is stuck in the oil cooler fins using compressed air.
Inspect the oil cooler for oil leaks. If any defects are found, replace the oil cooler with a new one.
If the fins are bent or dented, repair them by carefully straightening them with the blade of a small screwdriver.

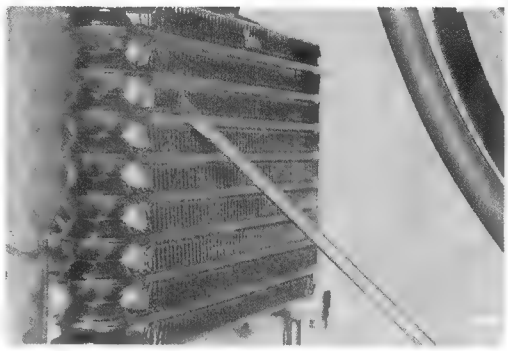

INSTALLATION

Installation is in the reverse order of removal.

NOTE:
Refer to the following pages for the details of each step.

Install:

- Oil cooler (☞3-9)

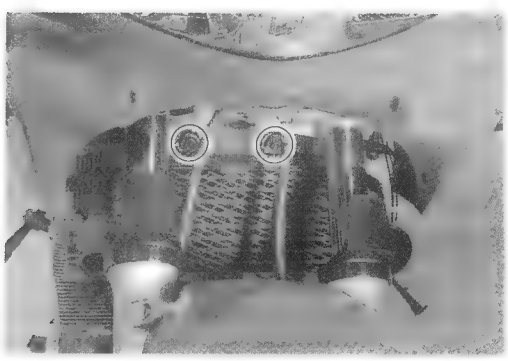

- Oil pressure switch (☞3-37)

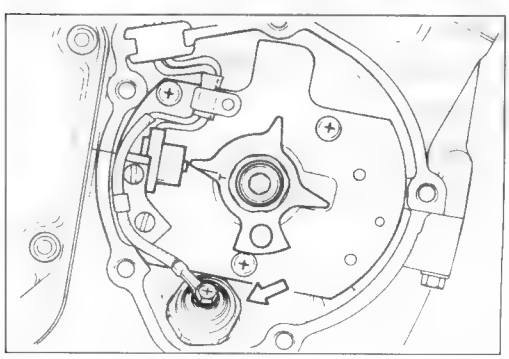

- Signal generator cover (☞3-46)

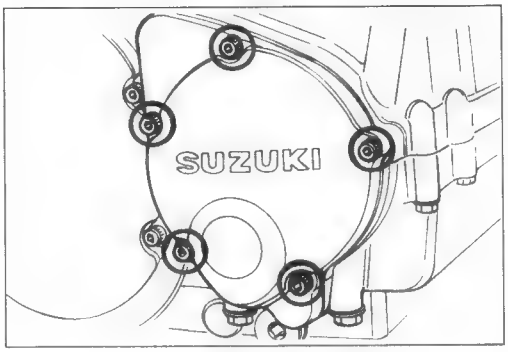

Adjust the following item to specification.
* Engine oil ..... ☞2-9

OIL FILTER

☞2-10

OIL PRESSURE

☞2-25

OIL JET

OIL JET (for the cylinder head) REMOVAL

- The oil jet (for the cylinder head) can be removed after removing the cylinder block.

NOTE:
Refer to the following pages for the details of each step.

Drain:
- Engine oil (☞2-9)

Remove:
- Cylinder block (☞3-15)
- Oil jet (for the cylinder head) ①

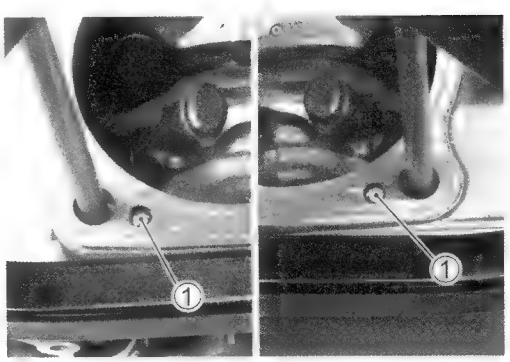

OIL JET (for piston cooling and the transmission)

REMOVAL

- The oil jet (for piston cooling and the transmission) can be removed after separating the crankcase.

Remove:

- Oil jet (for piston cooling) ①
- Oil jet (for the transmission) ②

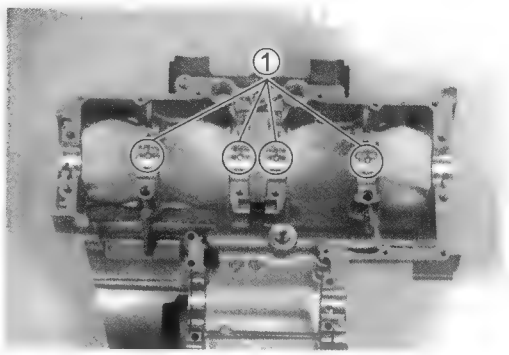

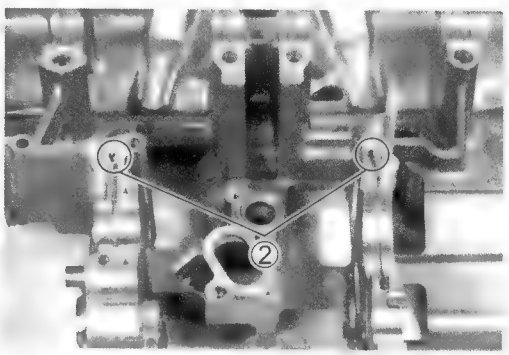

INSPECTION

Make sure that the oil jets are not clogged. If they are clogged, clean their oil passage using a wire of the proper size and compressed air.

INSTALLATION

Refer to the cylinder block installation, engine reassembly and engine installation sections.

NOTE:

Before installing the oil jets, apply a light coat of engine oil to the O-rings.

ENGINE LUBRICATION SYSTEM CHART

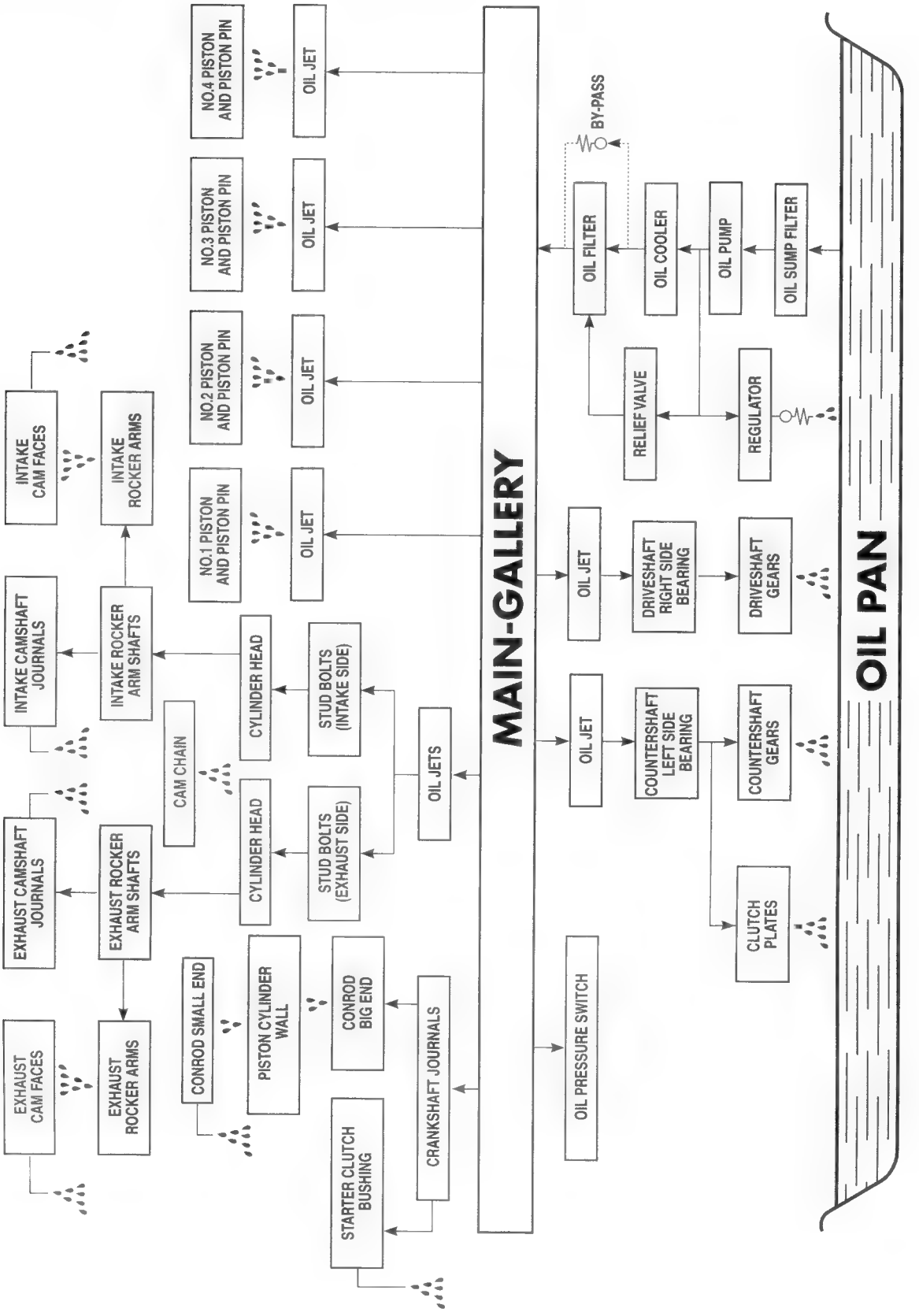

ENGINE LUBRICATION SYSTEM

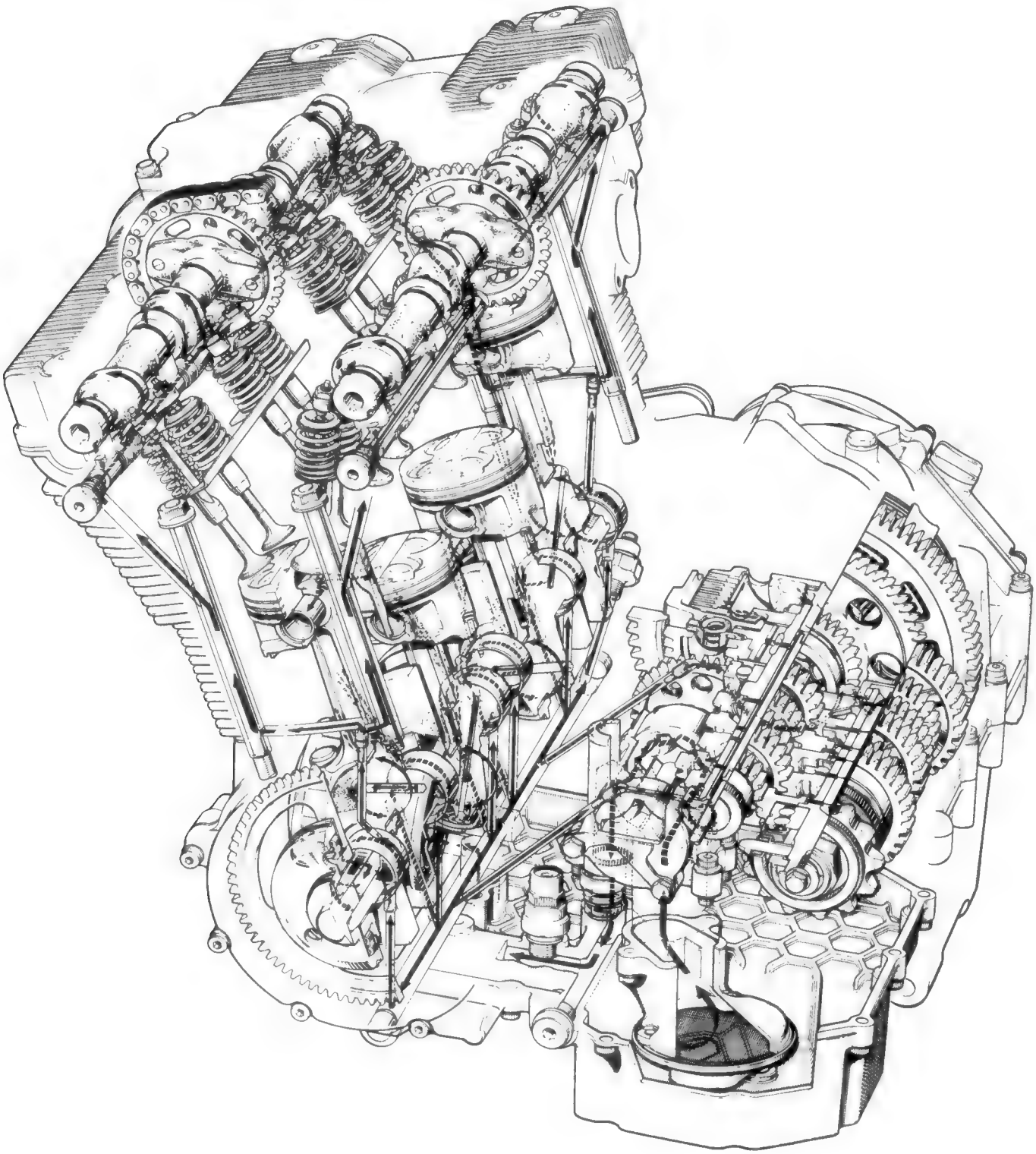

CYLINDER HEAD COOLING SYSTEM CHART

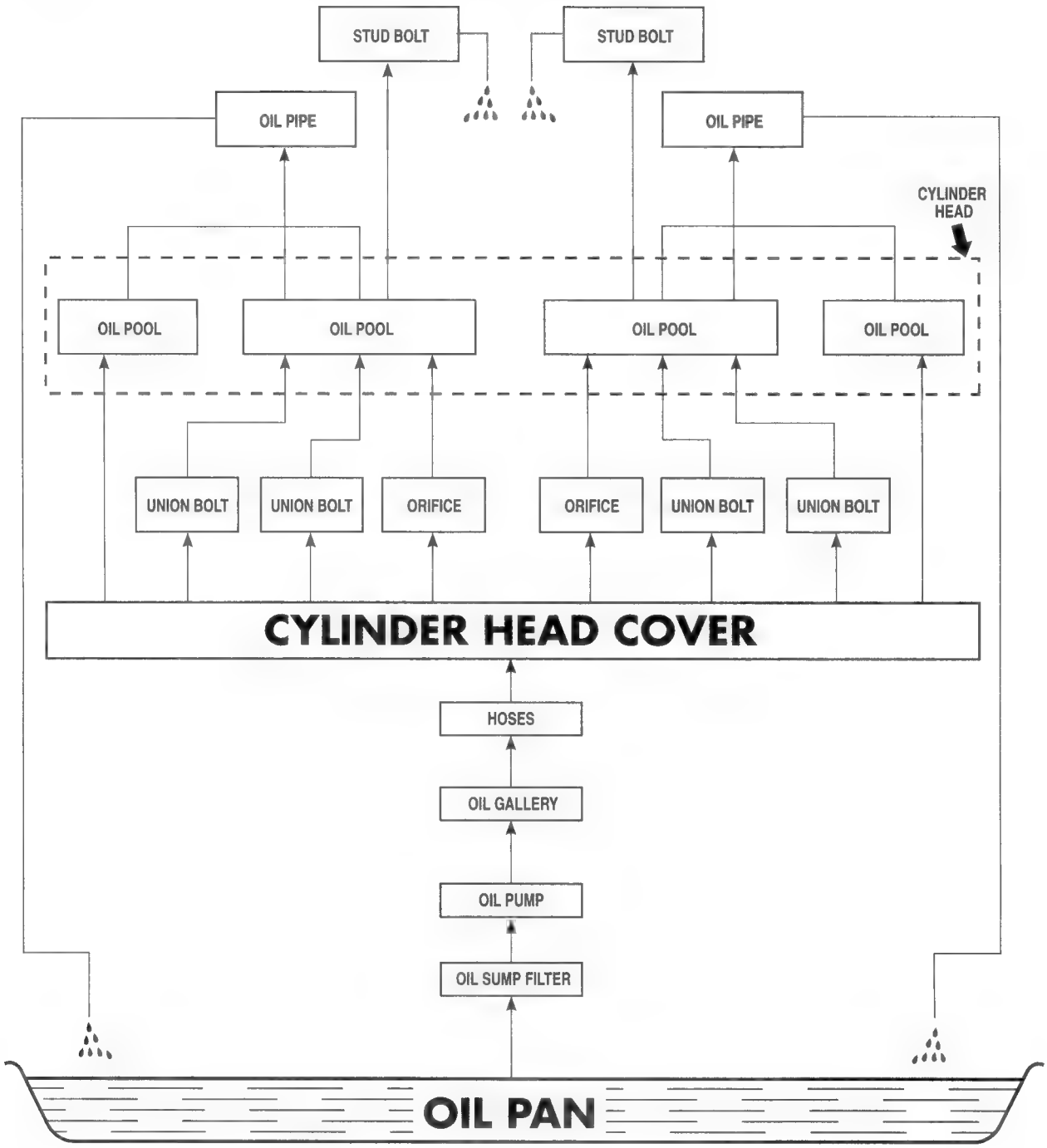

CYLINDER HEAD COOLING SYSTEM

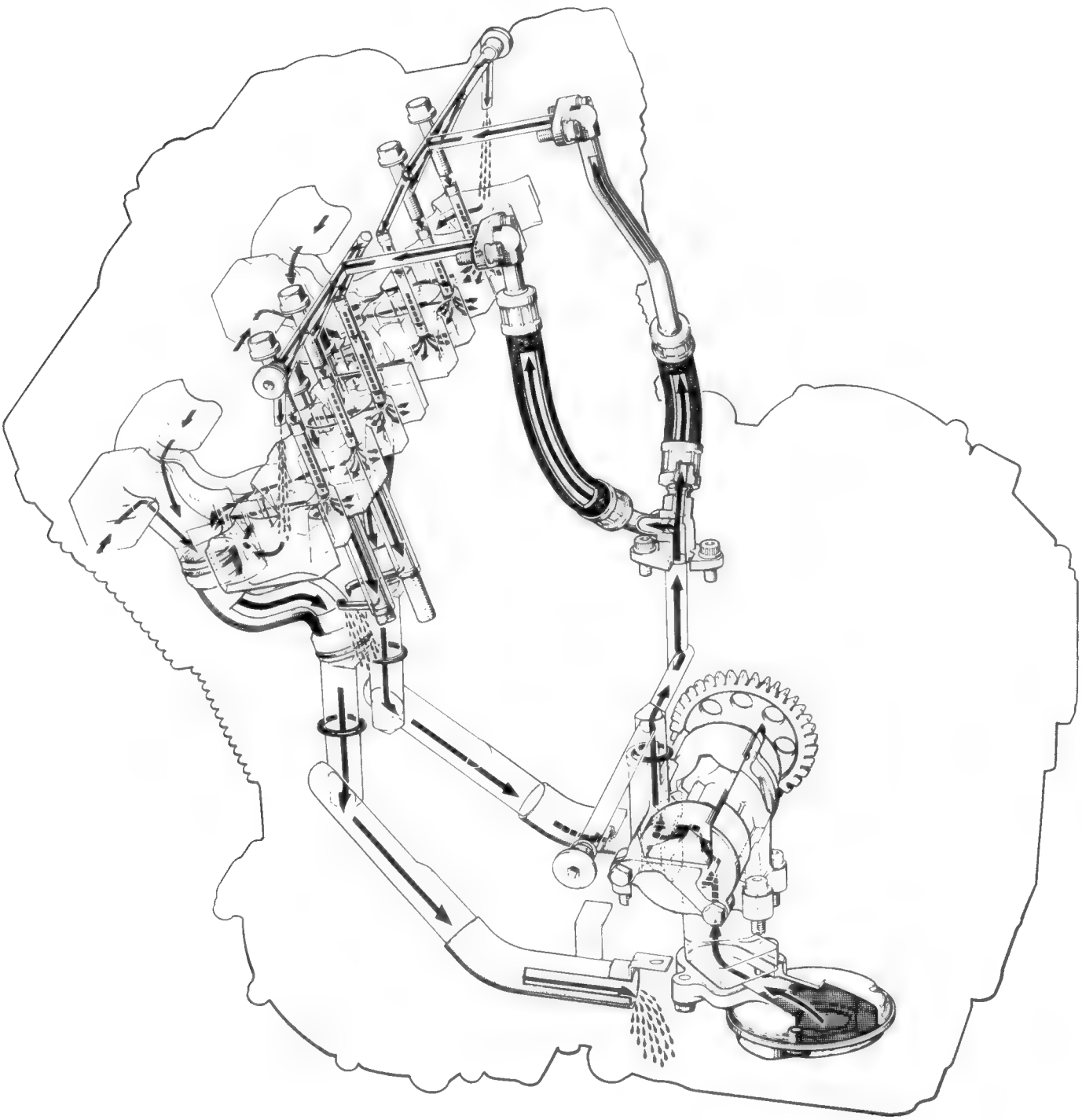

PAIR (AIR SUPPLY) SYSTEM

PAIR SYSTEM REMOVAL

- Remove the fuel tank. (☞4-3)
- Disconnect all of the PAIR valve hoses.

① Vacuum hose
② Air cleaner hose
③ PAIR hose No. 1
④ PAIR hose No. 2
⑤ PAIR hose No. 3
⑥ PAIR hose No. 4

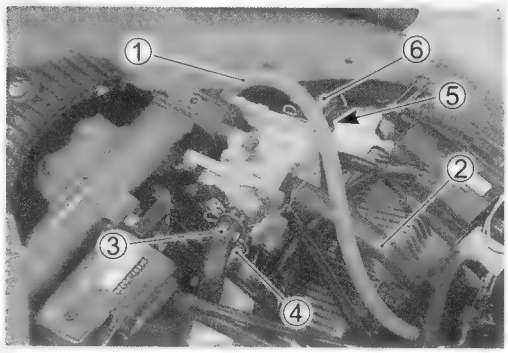

- Remove the PAIR valve.

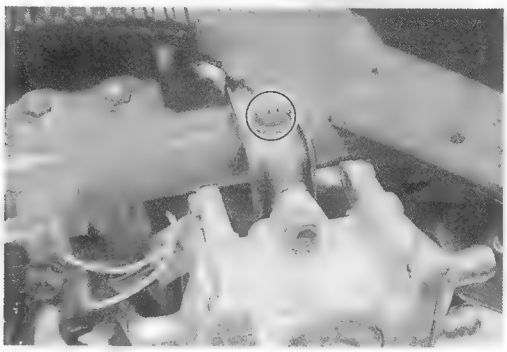

- Remove the PAIR pipes from each cylinder.

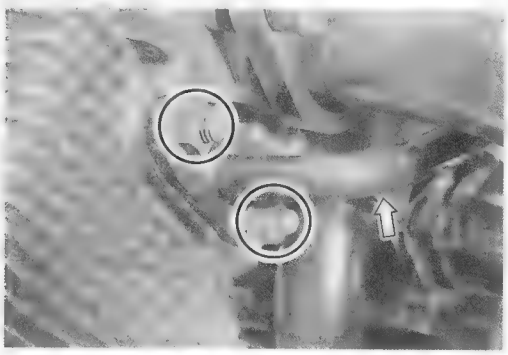

PAIR SYSTEM INSTALLATION

Installation is in the reverse order of removal. (☞3-100)

- Tighten the PAIR valve mounting bolt to the specified torque.

PAIR valve mounting bolt: 10 N·m (1.0 kgf·m, 7.0 lb-ft)

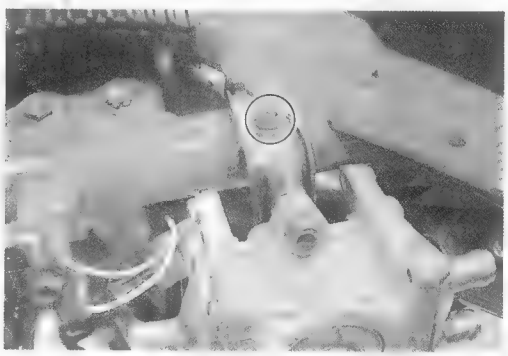

- Tighten the PAIR pipe mounting nuts to the specified torque.

PAIR pipe mounting nut: 10 N·m (1.0 kgf·m, 7.0 lb-ft)

⚠ CAUTION

Use a new gasket to prevent exhaust gas leakage.

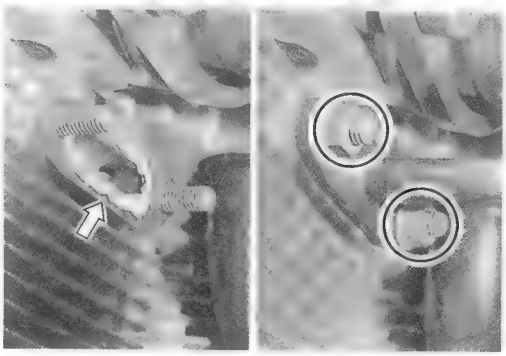

PAIR (AIR SUPPLY) SYSTEM INSPECTION

HOSES AND PIPES

- Inspect the hoses and pipes for wear or damage.
- Inspect that the hoses and pipes are securely connected.

PAIR VALVE

- Remove the PAIR valve. (☞3-98)
- Inspect the PAIR valve body for damage.

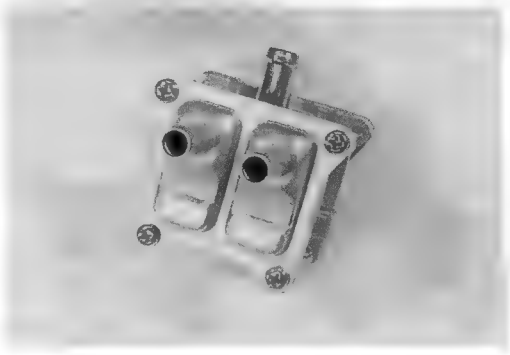

REED VAVLE

- Remove the PAIR valve cover.
- Inspect the reed valve for the carbon deposit.
- If the carbon deposit is found in the reed valve, replace the PAIR valve with a new one.

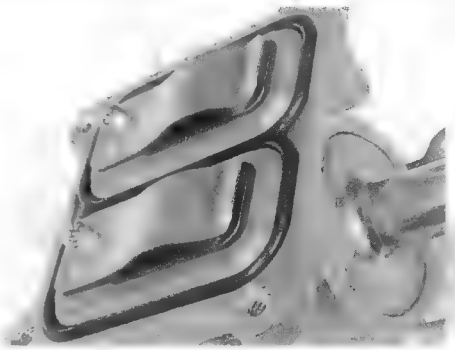

PAIR VALVE

- Inspect that air flows through the PAIR valve air inlet port Ⓐ to the air outlet parts Ⓑ.
- If air does not flow out, replace the PAIR valve with a new one.

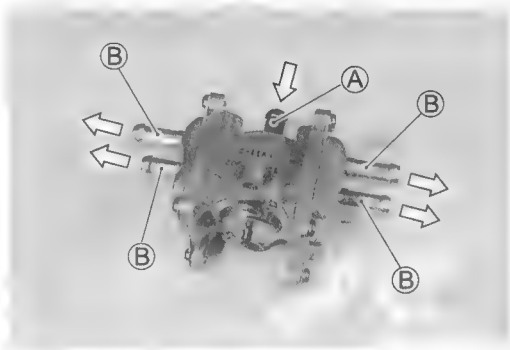

- Connect the vacuum pump gauge to the vacuum port of the PAIR valve as shown in the photograph.
- Apply negative pressure slowly to the PAIR valve and inspect the air flow.
- If air does not flow out within the specification, the PAIR valve is in normal condition.
- If the PAIR valve does not function within the specification, replace the PAIR valve with a new one.

DATA Negative pressure range: 44 – 65.3 kPa (330 – 490 mmHg)

TOOL 09917-47010: Vacuum pump gauge

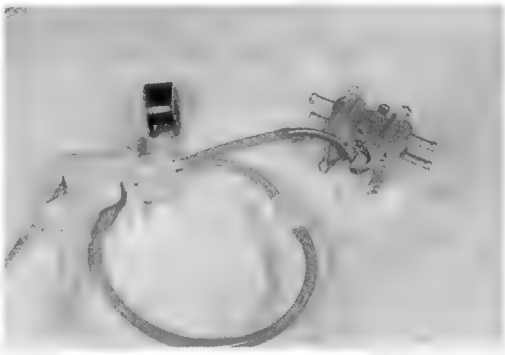

⚠ CAUTION

Use a hand operated vacuum pump to prevent the PAIR valve damage.

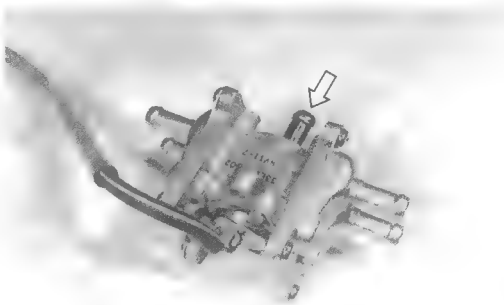

PAIR (AIR SUPPLY) SYSTEM HOSE ROUTING

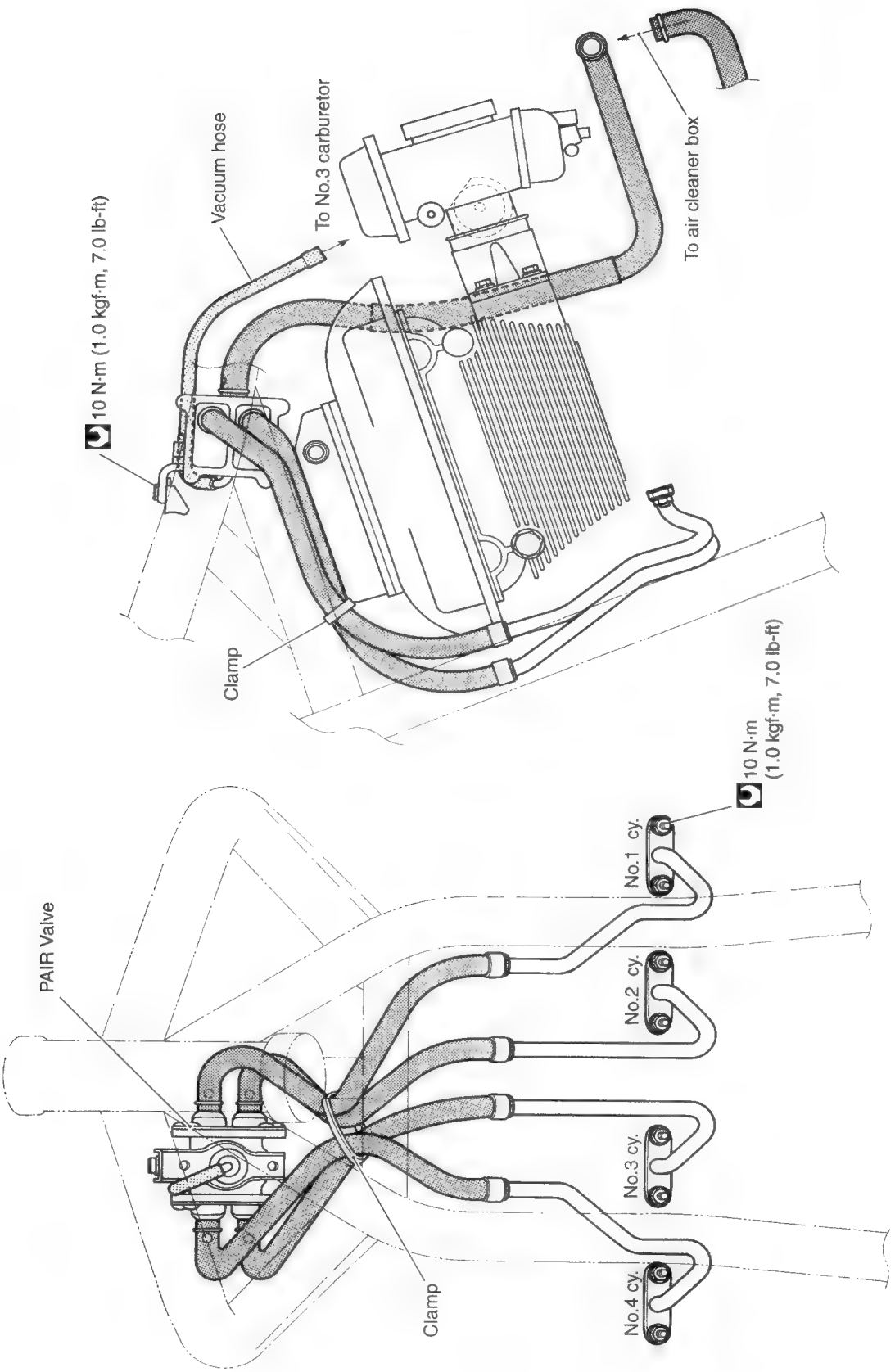

FUEL SYSTEM

CONTENTS

FUEL SYSTEM 4- 2
FUEL TANK 4- 3
REMOVAL 4- 3
REMOUNTING 4- 3
FUEL VALVE 4- 4
REMOVAL 4- 5
INSPECTION AND CLEANING 4- 5
REMOUNTING 4- 5
FUEL FILTER REMOVAL 4- 6
INSPECTION 4- 6
FUEL FILTER REMOUNTING 4- 6
CARBURETOR 4- 7
CONSTRUCTION 4- 7
SPECIFICATIONS 4- 8
I.D. NO. LOCATION 4- 9
DIAPHRAGM AND PISTON OPERATION 4-10
SLOW SYSTEM 4-11
MAIN SYSTEM 4-12
STARTER (ENRICHER) SYSTEM 4-13
FLOAT SYSTEM 4-13
REMOVAL 4-14
DISASSEMBLY 4-15
CARBURETOR CLEANING 4-19
CARBURETOR HEATER INSPECTION 4-19
THERMO-SWITCH INSPECTION 4-19
CARBURETOR INSPECTION 4-20
REASSEMBLY 4-21
REMOUNTING 4-22
CARBURETOR SYNCHRONIZATION 4-23

FUEL SYSTEM

The fuel system consists of a fuel tank, fuel valve, vacuum hose, fuel filter, fuel hose and carburetor assembly When there is negative pressure (vacuum) in the combustion chamber, the fuel is able to flow from the fue tank, through the fuel valve and then to the carburetor assembly.

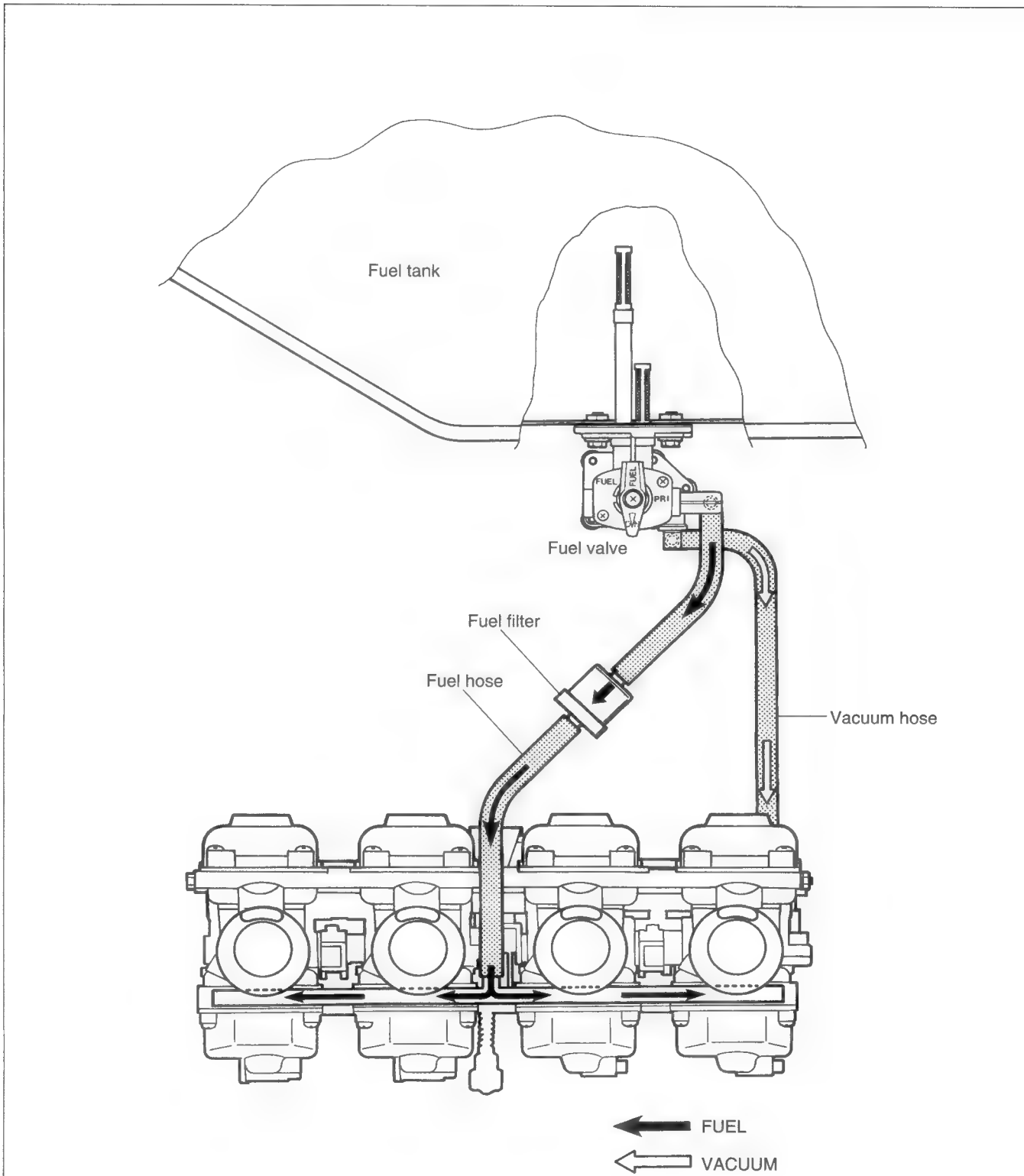

FUEL TANK

REMOVAL

- Remove the seat. (☞5-5)
- Remove the fuel tank mounting bolts ①.

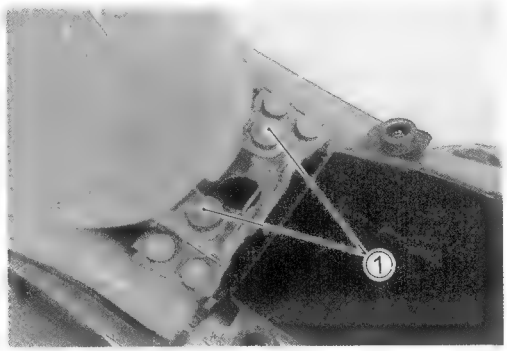

- Turn the fuel valve knob to the "ON" position.
- Remove the fuel valve knob ② by removing its mounting screw.

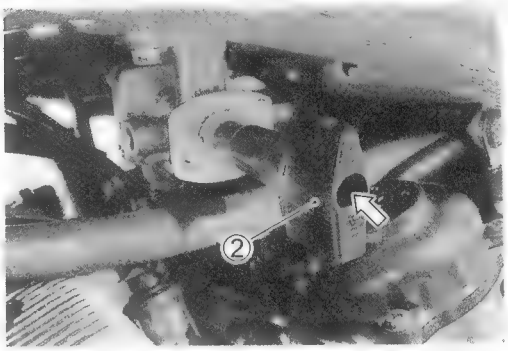

- Disconnect the vacuum hose ③, fuel hose ④ and fuel tank drain hose ⑤.

⚠ WARNING

Gasoline is highly flammable and explosive.
Keep heat, sparks and flames away from gasoline.

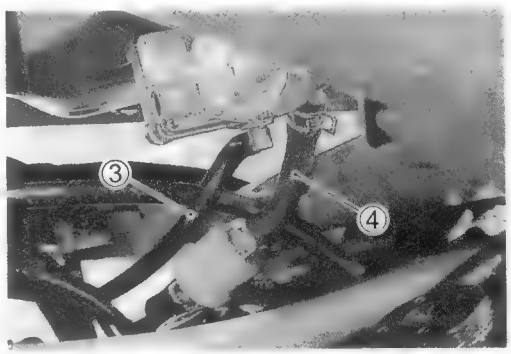

- Remove the fuel tank.

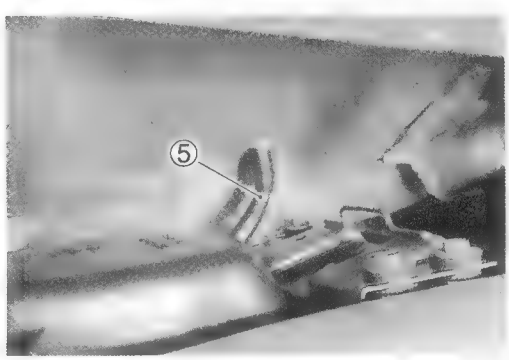

REMOUNTING

Remount the fuel tank in the reverse order of removal.

FUEL VALVE

When the engine is not operating, the fuel valve ① is kept closed by the tension of the spring ②, which closes the fuel passageway and stops the flow of fuel to the carburetors.
When the engine has started, negative pressure (vacuum) Ⓐ is generated in the combustion chamber and reaches the diaphragm through a passage in the carburetor's main bore and the vacuum hose. This negative pressure (vacuum) Ⓐ is higher than the spring pressure which causes the diaphragm to force open the fuel valve ① and allow fuel to flow to the carburetor assembly.

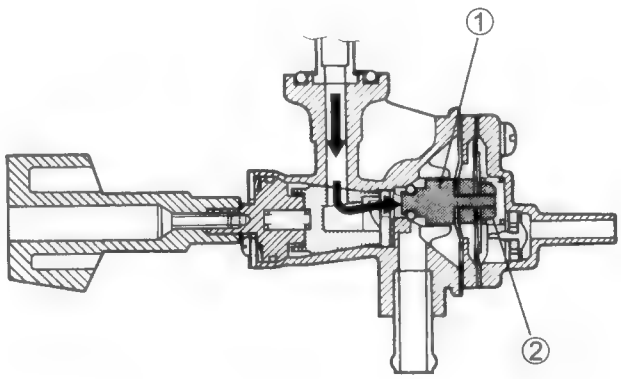

"Fuel stop" condition

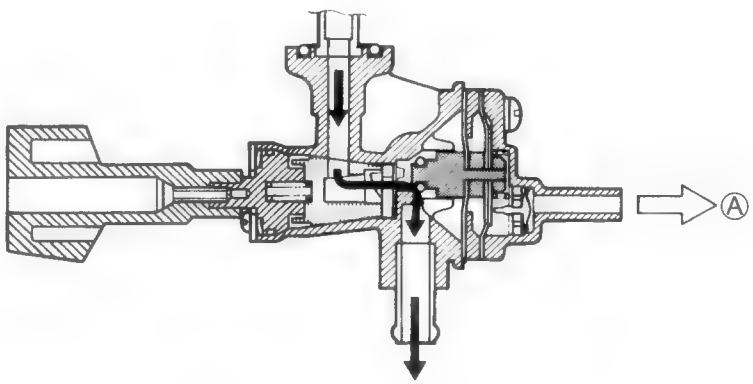

"Fuel flow" condition

VACUUM

FUEL

REMOVAL

- Remove the fuel tank. (☞4-3)
- Remove the fuel valve ①.

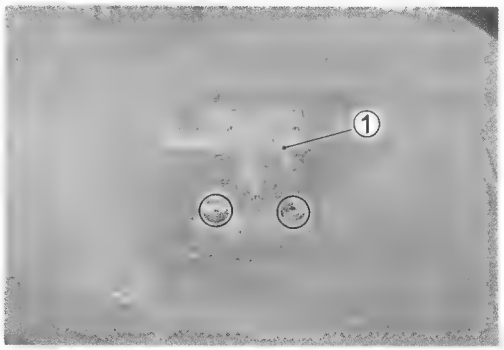

⚠ WARNING

*** Gasoline is very explosive. Extreme care must be taken.**
*** The gaskets ② and O-ring ③ must be replaced with new ones to prevent fuel leakage.**

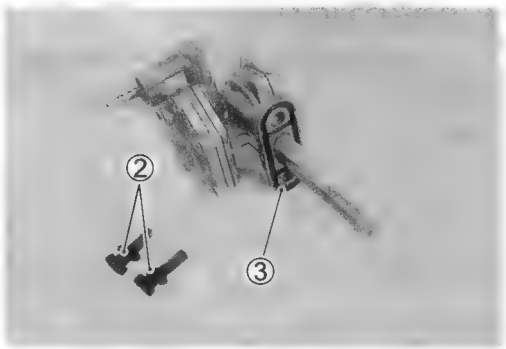

INSPECTION AND CLEANING

If the fuel filter is dirty with sediment or rust, fuel will not flow smoothly and loss in engine power may result. Clean the fuel filter with compressed air.

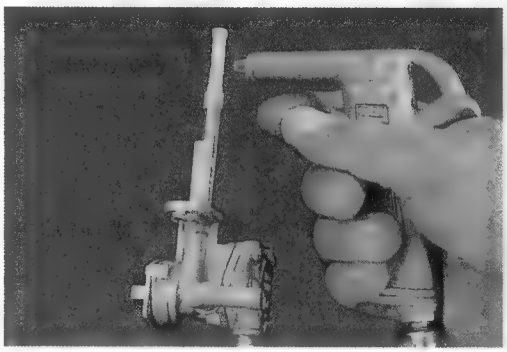

REMOUNTING

Remount the fuel valve in the reverse order of removal.

FUEL FILTER REMOVAL

- Remove the fuel tank. (☞4-3)
- Remove the fuel filter ①.

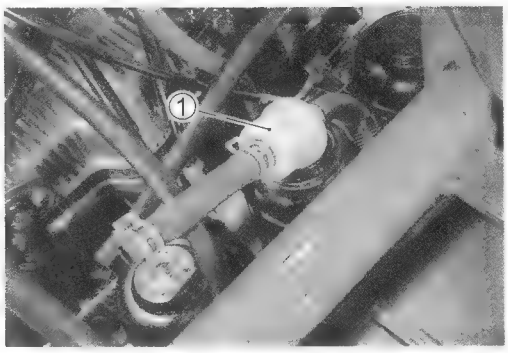

INSPECTION

If the fuel filter is dirty with sediment or rust, fuel will not flow smoothly and loss in engine power may result. Replace the fuel filter.

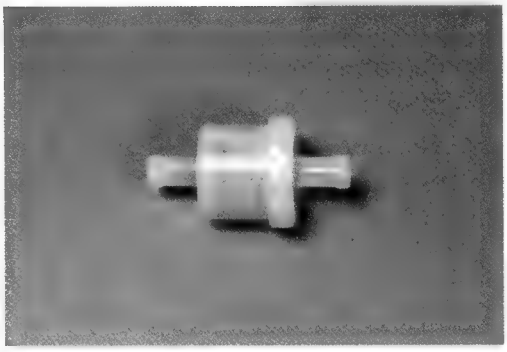

FUEL FILTER REMOUNTING

Remount the fuel filter in the reverse order of removal. Pay attention to the following point.

- Install the fuel filter ① as shown.

NOTE:

Be sure to face the arrow mark on the fuel filter to the carburetor side.

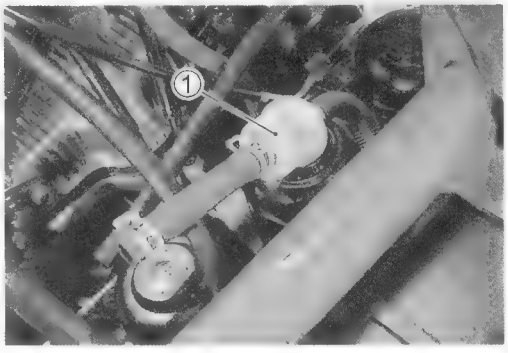

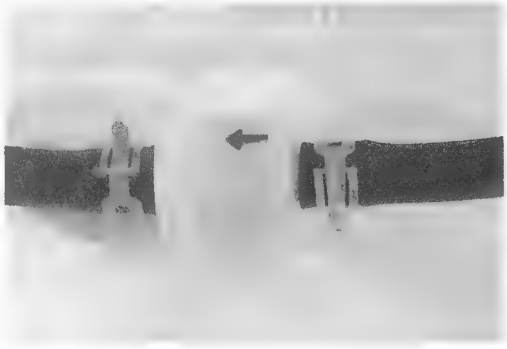

CARBURETOR

CONSTRUCTION

① Top cap
② Spring
③ Jet needle stopper
④ Jet needle
⑤ Diaphragm/Piston valve
⑥ Needle jet
⑦ Needle jet holder
⑧ Main jet
⑨ Pilot screw
⑩ Pilot jet
⑪ Needle valve assy
⑫ Float
⑬ Float pin
⑭ Starter (enricher) plunger
⑮ Gasket (O-ring)
⑯ Float chamber
⑰ Drain screw
⑱ Vacuum inlet cap
⑲ Vacuum hose (for fuel valve)
⑳ Carburetor set shaft (Upper and Lower)
㉑ TPS (Throttle position sensor)

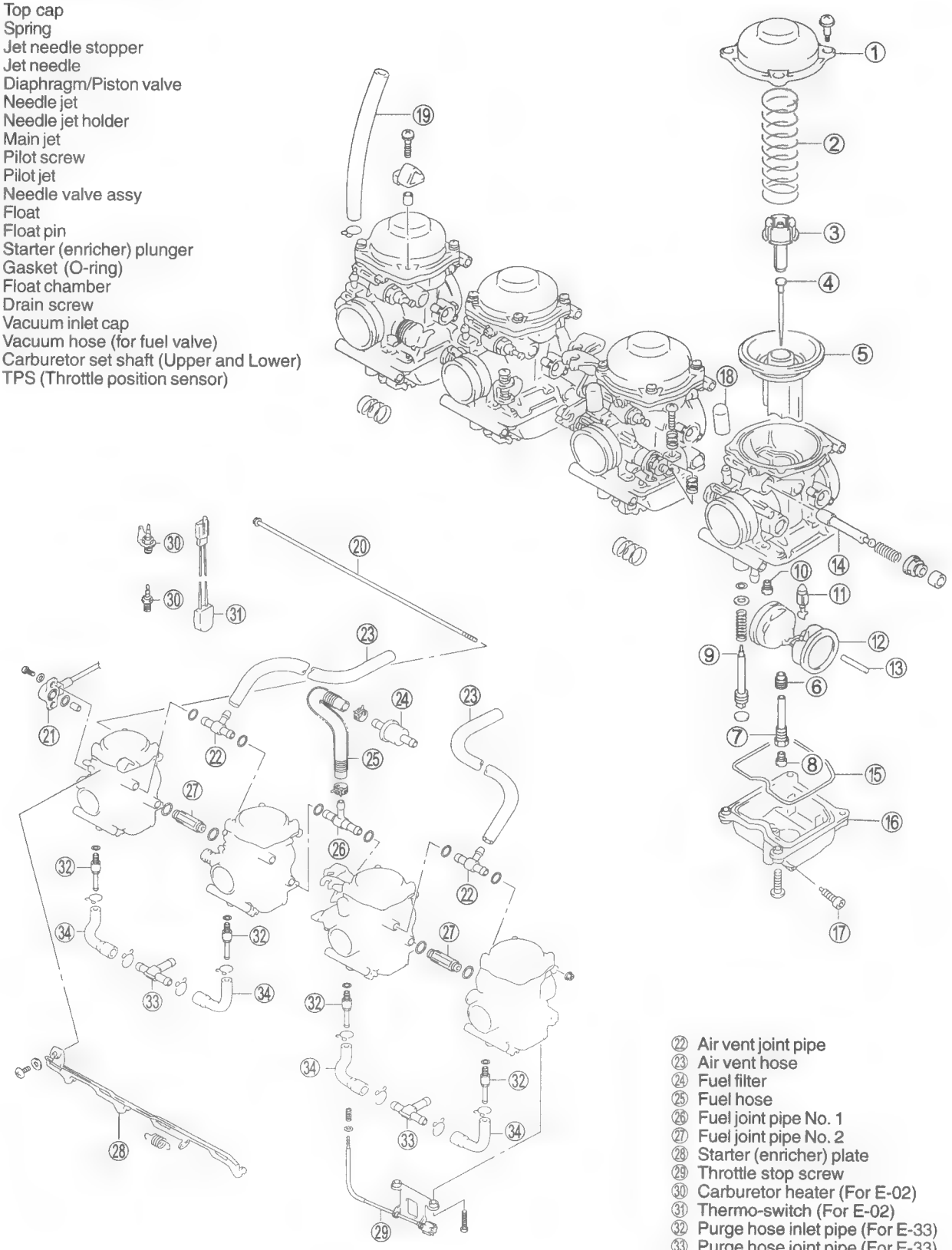

㉒ Air vent joint pipe
㉓ Air vent hose
㉔ Fuel filter
㉕ Fuel hose
㉖ Fuel joint pipe No. 1
㉗ Fuel joint pipe No. 2
㉘ Starter (enricher) plate
㉙ Throttle stop screw
㉚ Carburetor heater (For E-02)
㉛ Thermo-switch (For E-02)
㉜ Purge hose inlet pipe (For E-33)
㉝ Purge hose joint pipe (For E-33)
㉞ Purge hose (For E-33)

SPECIFICATIONS

ITEM	SPECIFICATION	
	E-02, 19, 24	E-03, 28
Carburetor type	KEIHIN CVR32SS	←
Bore size	32 mm	←
I.D. No.	31F0	31F2
Idle r/min.	1 200 ± 100 r/min.	←
Float height	17.0 ± 1.0 mm (0.67 ± 0.04 in)	←
Main jet (M.J.)	#92	←
Jet needle (J.N.)	N1QL	←
Needle jet (N.J.)	ϕ 3.4	←
Throttle valve (Th. V.)	11°	←
Pilot jet (P.J.)	#35	←
Pilot screw (P.S.)	PRE-SET (1¾ turns back)	PRE-SET (1⅞ turns back)
Throttle cable play (pulling cable)	2.0 – 4.0 mm (0.08 – 0.16 in)	←
Starter (enricher) plunger cable play	0.5 – 1.0 mm (0.02 – 0.04 in)	←

ITEM	SPECIFICATION	
	E-19 (U-type)	E-33
Carburetor type	KEIHIN CVR32SS	←
Bore size	32 mm	←
I.D. No.	31F1	31F3
Idle r/min.	1 200 ± 100 r/min.	←
Float height	17.0 ± 1.0 mm (0.67 ± 0.04 in)	←
Main jet (M.J.)	#92	←
Jet needle (J.N.)	N1QL	←
Needle jet (N.J.)	ϕ 3.4	←
Throttle valve (Th. V.)	11°	←
Pilot jet (P.J.)	#35	←
Pilot screw (P.S.)	PRE-SET (1⅞ turns back)	←
Throttle cable play (pulling cable)	2.0 – 4.0 mm (0.08 – 0.16 in)	←
Starter (enricher) plunger cable play	0.5 – 1.0 mm (0.02 – 0.04 in)	←

E-02: UK E-03: USA E-19: European markets E-24: Australia E-28: Canada E-33: California (USA)

I.D. NO. LOCATION

Each carburetor has an I.D. number ① printed on its body.

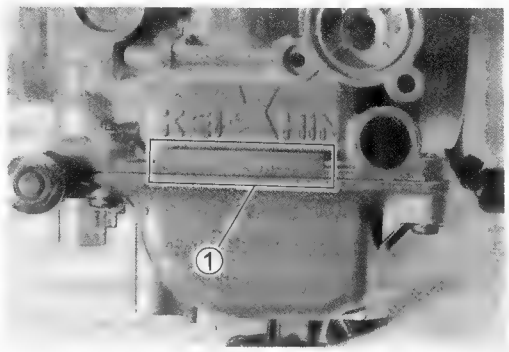

DIAPHRAGM AND PISTON OPERATION

The carburetor is a variable-venturi type, whose venturi cross sectional area is increased or decreased automatically by the piston valve ①. The piston valve moves according to the negative pressure present on the downstream side of the venturi Ⓐ. Negative pressure is admitted into the diaphragm chamber ② through an orifice ③ provided in the piston valve ①.

Rising negative pressure overcomes the spring ④ force, causing the piston valve ① to rise into the diaphragm chamber and prevent the air velocity from increasing. Thus, air velocity in the venturi passage is kept relatively constant for improved fuel atomization and the precise air/fuel mixture.

LOWER POSITION OF PISTON VALVE

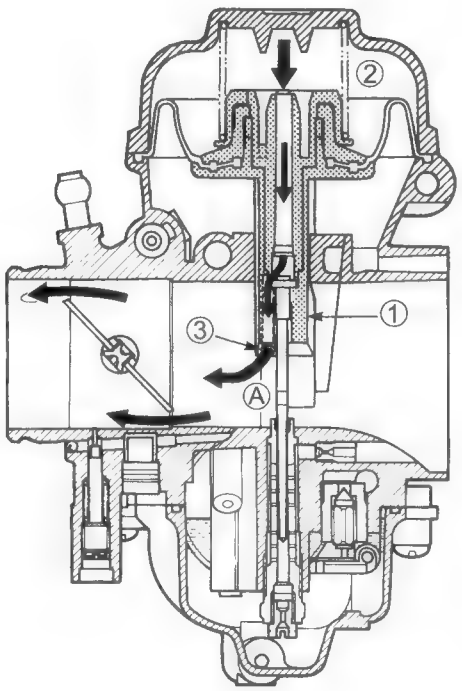

UPPER POSITION OF PISTON VALVE

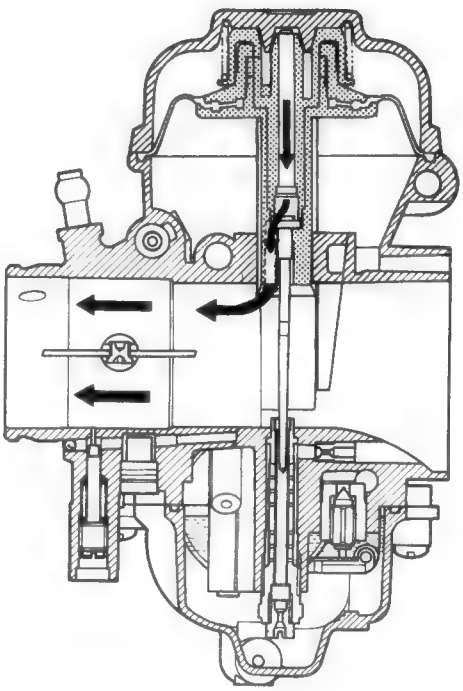

NEGATIVE PRESSURE

SLOW SYSTEM

This system supplies fuel during engine operation when the throttle valve ① is closed or slightly opened. The fuel from the float chamber ② is metered by the pilot jet ③ where it mixes with air coming in through the pilot air jet ④. This mixture, rich with fuel, then goes up through the pilot passage to the pilot screw ⑤. Part of the mixture is discharged into the main bore through bypass ports ⑥. The mixture is metered by the pilot screw ⑤ and sprayed into the main bore through the pilot outlet port ⑦.

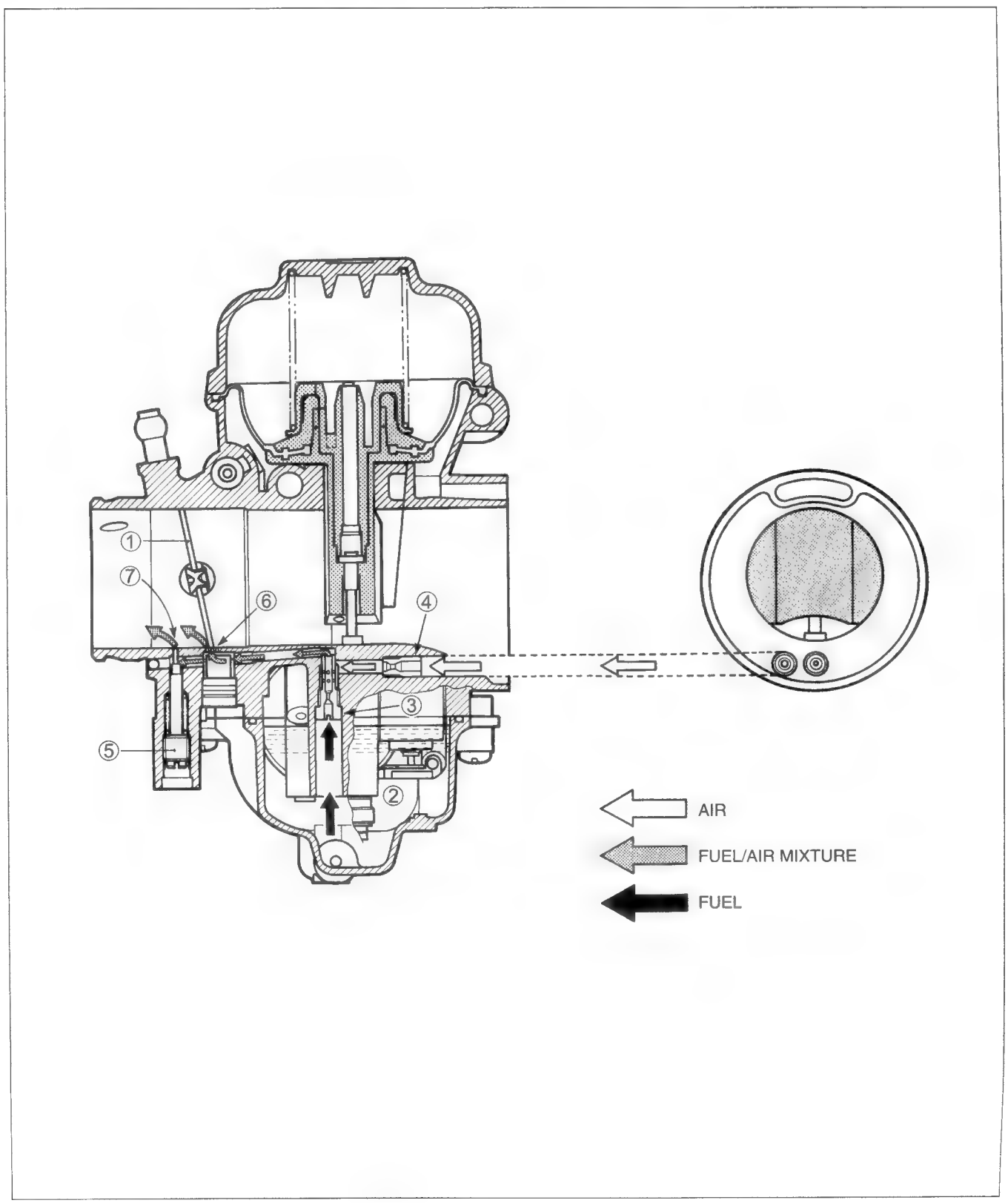

MAIN SYSTEM

As the throttle valve ① is opened, engine speed rises and negative pressure in the venturi Ⓐ increases. This causes the piston valve ② to move upward.

The fuel in the float chamber ③ is metered by the main jet ④. The metered fuel enters the needle jet ⑤, mixes with the air admitted through the main air jet ⑥ and forms an emulsion.

The emulsified fuel then passes through the clearance between the needle jet ⑤ and jet needle ⑦ and is discharged into the venturi Ⓐ, where it meets the main air stream being drawn by the engine.

Mixture proportioning is accomplished in the needle jet ⑤. The clearance through which the emulsified fuel must flow ultimately depends on throttle position.

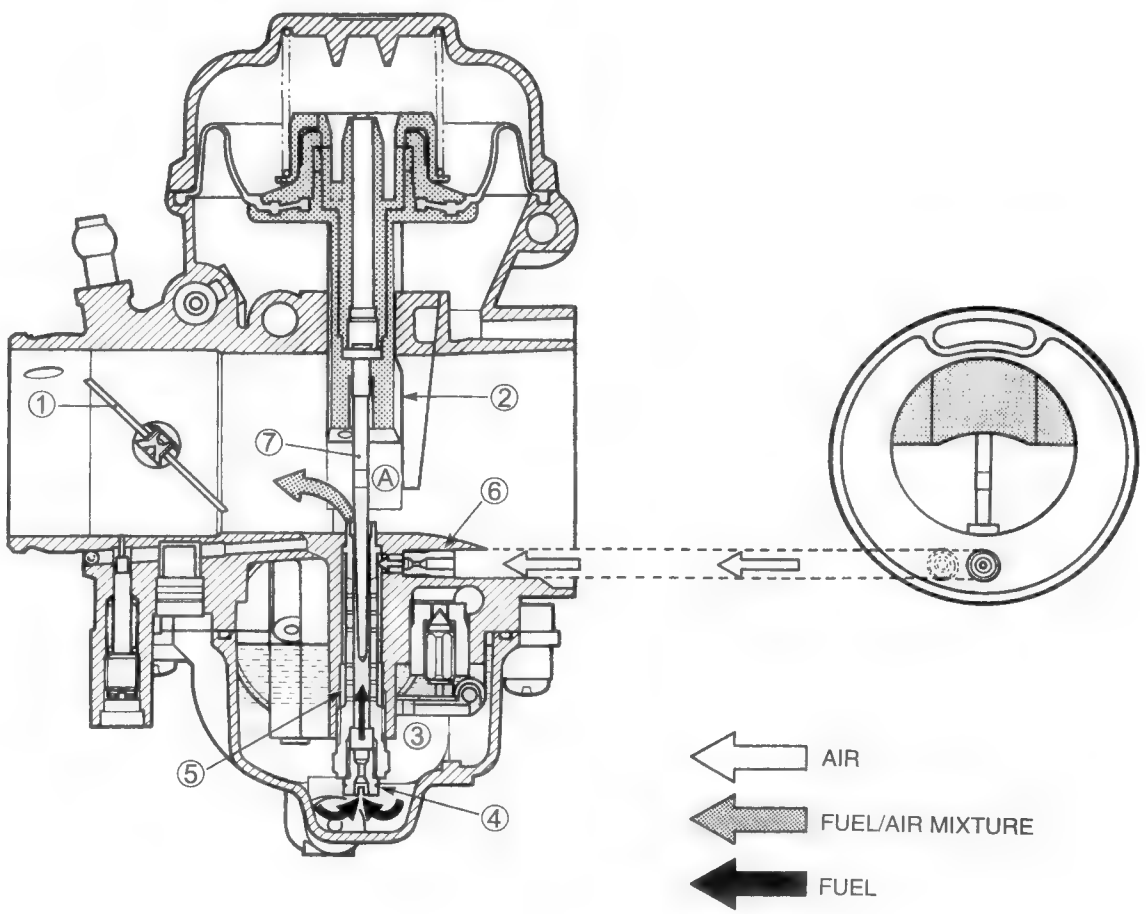

STARTER (ENRICHER) SYSTEM

Pulling the starter (enricher) plunger causes fuel to be drawn into the starter circuit from the float chamber ①.

The starter jet ② meters this fuel. The fuel then flows into the fuel pipe ③ and mixes with the air coming from the float chamber ①. The mixture, rich in fuel, reaches the starter plunger ④ and mixes again with the air coming through a passage extending from behind the diaphragm.

The two successive mixtures of the fuel with the air provide the proper air/fuel mixture for starting.

This occurs when the mixture is sprayed through the starter outlet port ⑤ into the main bore.

NOTE:

A starter (enricher) system is operated almost the same way as a choke.

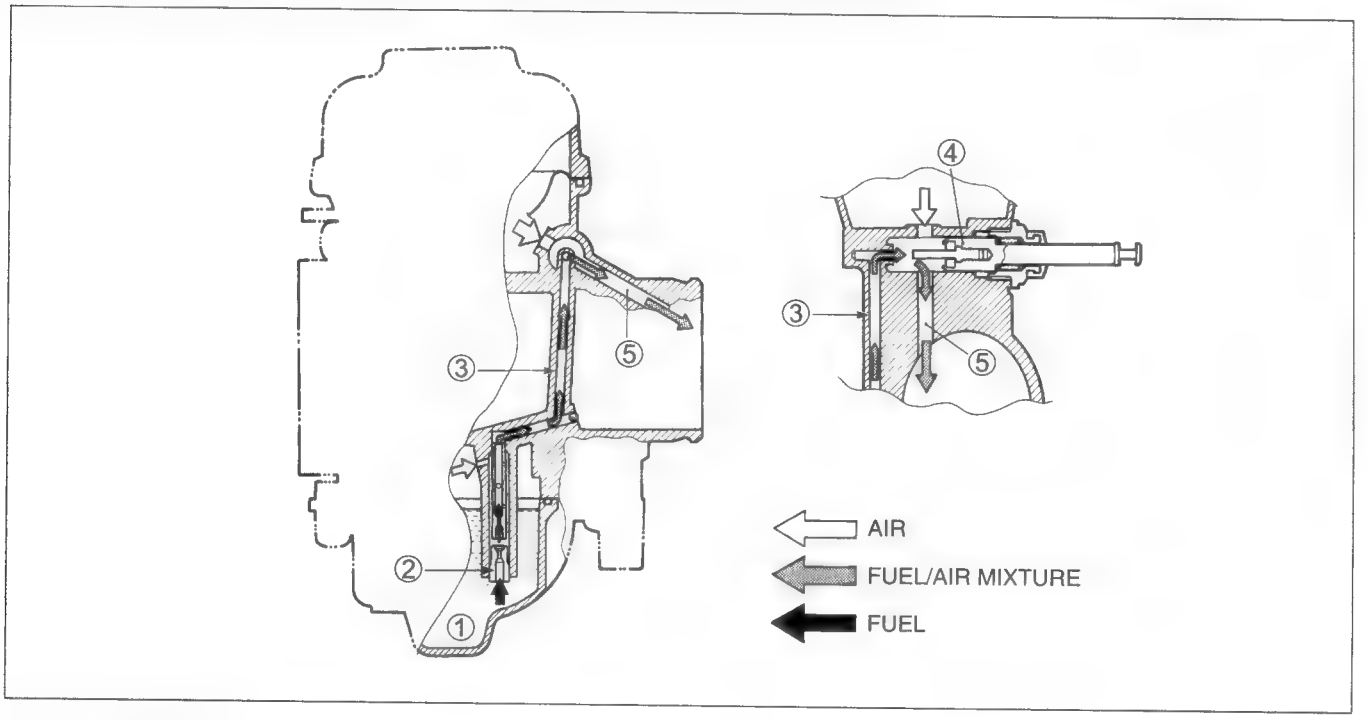

FLOAT SYSTEM

The float ① and needle valve ② work in conjunction with one another. As the float ① moves up and down, so does the needle valve ②.

When there is a high fuel level in the float chamber ③, the float ① rises and the needle valve ② pushes up against the valve seat. When this occurs, no fuel enters the float chamber ③.

As the fuel level falls, the float ① lowers and the needle valve ② unseats itself; admitting fuel into the float chamber ③.

In this manner, the needle valve ② admits and shuts off fuel to maintain the appropriate fuel level inside the float chamber ③.

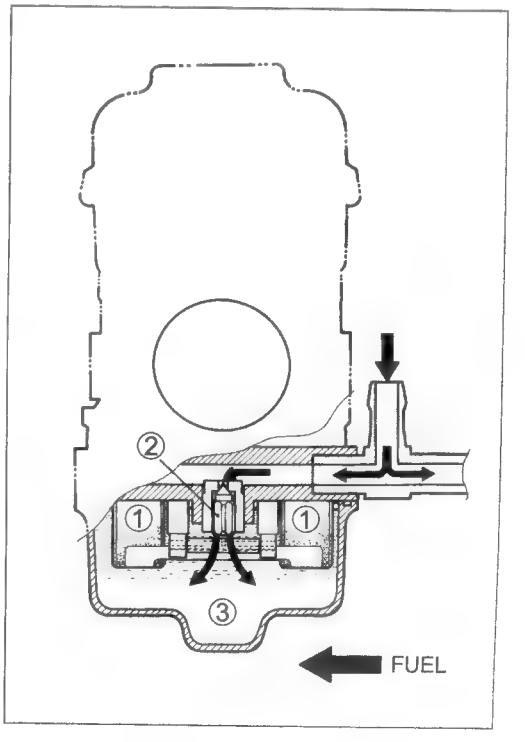

REMOVAL

- Remove the fuel tank. (☞4-3)
- Remove the side frame covers. (☞5-6)
- Remove the fuel tank mounting bolts ①.
- Remove the air cleaner box mounting bolts ②.

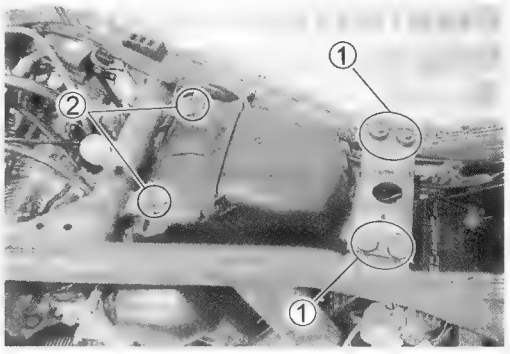

- Disconnect the throttle position sensor coupler ③.

- Loosen the respective carburetor clamp screws.
- Slightly move the air cleaner box ④ back.

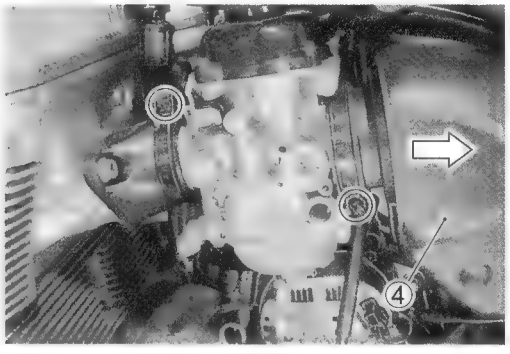

- Remove the carburetor assembly by disconnecting the starter cable ⑤ and throttle cables ⑥.

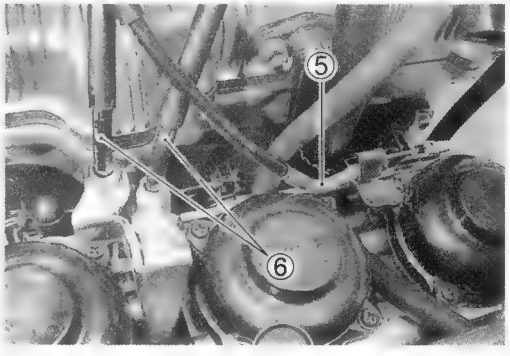

DISASSEMBLY

Before disassembly, prepare a clean and well lit work place where carburetor components can be laid out neatly and will not get lost. Study the service manual carburetor diagram and familiarize yourself with component locations and the different fuel circuits and their routing through the carburetor.

⚠ CAUTION

The throttle position sensor is preset at the factory. Prior to disassembly, mark the throttle position sensor's original position with paint or a scribe for accurate reinstallation.

Avoid removing the throttle position sensor from the carburetor body unless absolutely necessary.

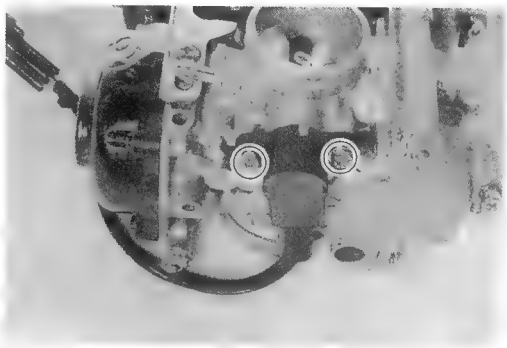

- Disconnect the fuel filter ① and fuel hose ②.
- Disconnect the vacuum hose ③ (for fuel valve) and vacuum hose ④ (for PAIR valve).
- Disconnect the air vent hoses ⑤.

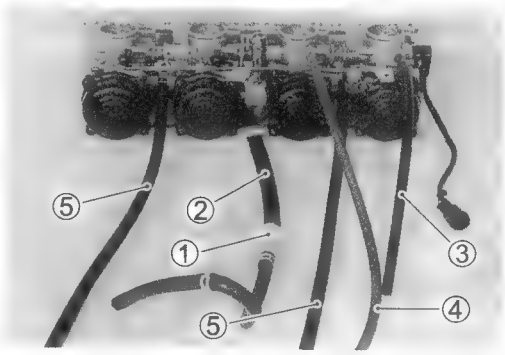

- Remove the starter (enricher) plate ⑥ by removing the spring and fitting screws.

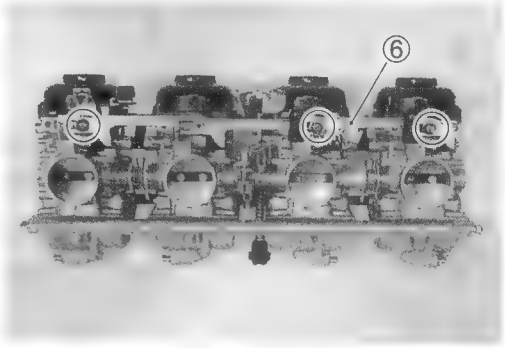

- Remove the upper ⑦ and lower ⑧ carburetor set shafts.
- Separate the carburetor assembly.

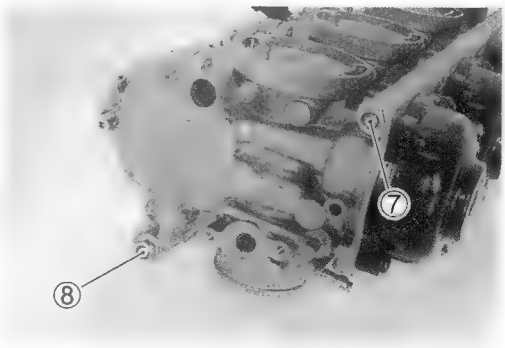

- Remove the top cap ①.

⚠ CAUTION

Do not use compressed air on the carburetor body, before removing the diaphragm; this may damage the diaphragm.

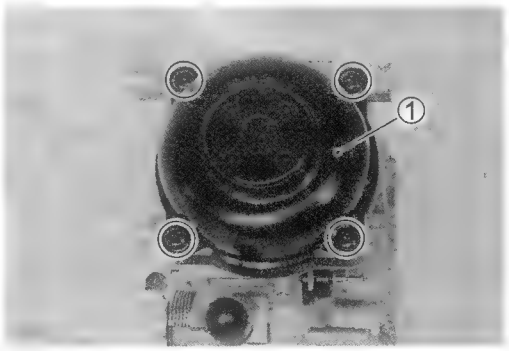

- Remove the spring ② and the piston valve along with its diaphragm ③.

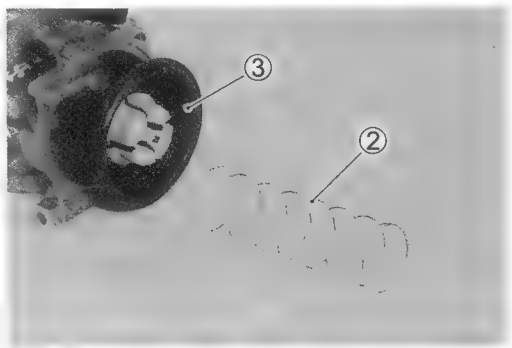

- With the jet needle stopper ④ pinched, remove it.

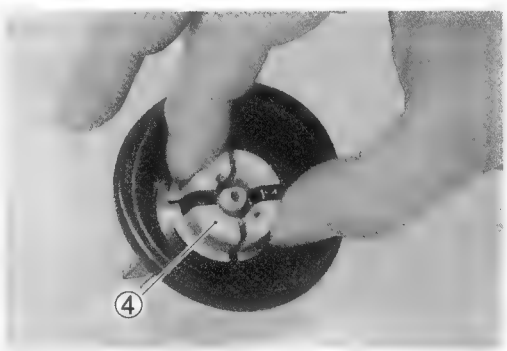

- Remove the washer ⑤, E-ring ⑥, washer ⑦ and jet needle ⑧.

NOTE:
The washer ⑤ is thicker than the washer ⑦.

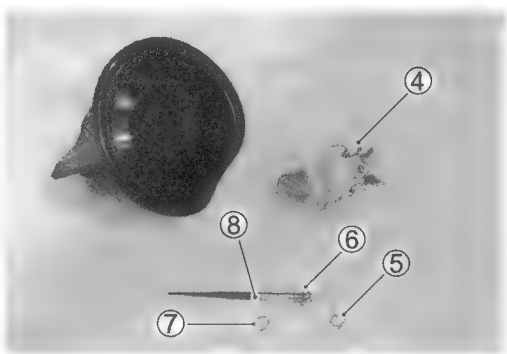

- Remove the float chamber ⑨.

TOOL 09900-09004: Impact driver set

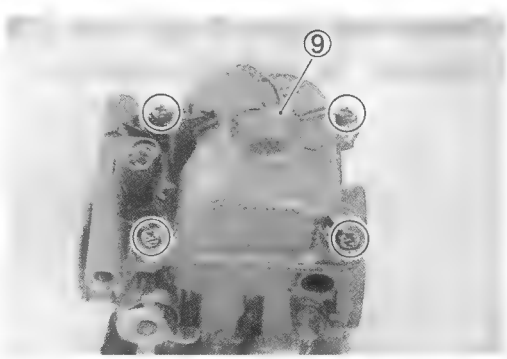

• Remove the O-ring ①.

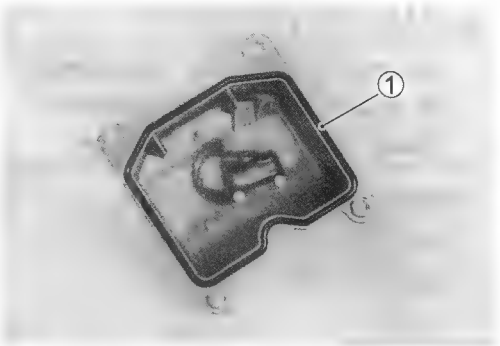

⚠ CAUTION

Use a new O-ring to prevent fuel leakage.

• Remove the float ②, float pin ③ and needle valve ④.

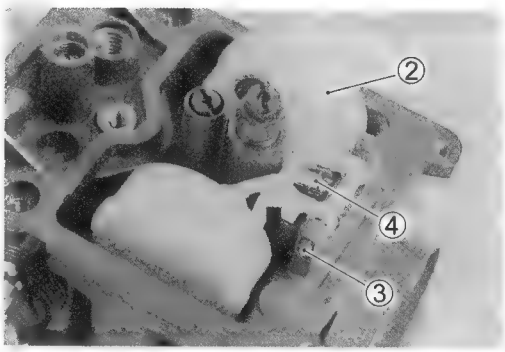

• Remove the following parts.
⑤ Valve seat
⑥ Main jet
⑦ Needle jet
⑧ Pilot jet
⑨ Starter (enricher) jet
⑩ Pilot screw

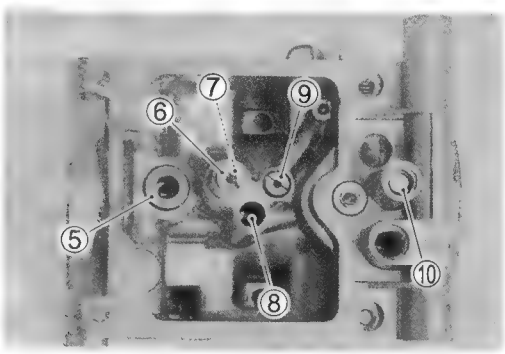

NOTE:
Before removing the pilot screw ⑩, its setting must be determined. Slowly turn the pilot screw clockwise and count the number of turns until it is lightly seated. Make a note of how many turns were made.
When reassembling the pilot screw, you will want to set it to its original position.

⚠ CAUTION

Do not use a wire to clean the passages, valve seat and jets.

• Remove the starter (enricher) plunger assembly ⑪.

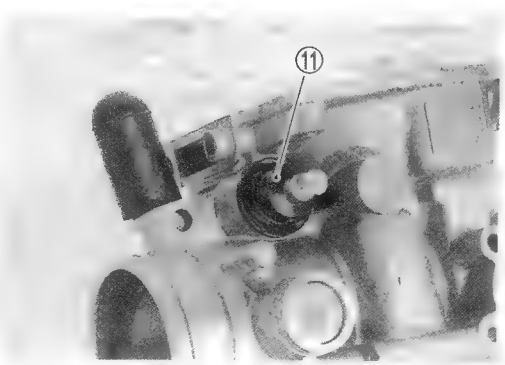

⚠ CAUTION

*** Do not remove the main air jet ①.**
*** It is press fitted at the factory and attempting to remove it will cause damage.**

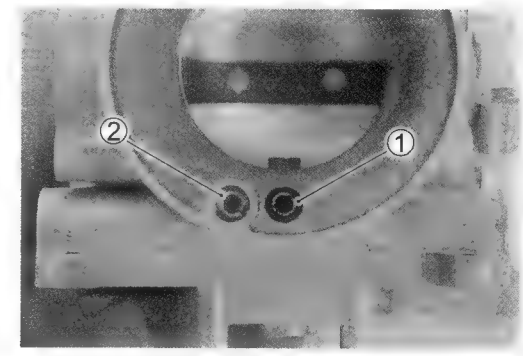

- Remove the pilot air jet ②.

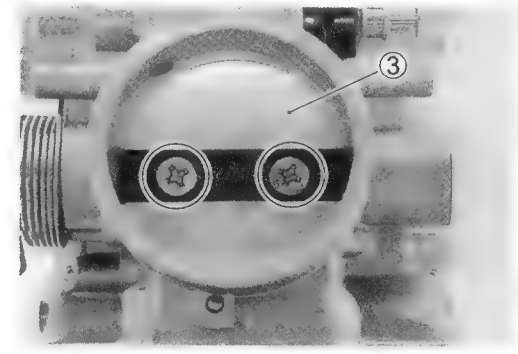

- Remove the throttle valve ③.

PILOT SCREW REMOVAL (For with plug type)

Because harsh cleaning solvents can damage the O-ring seals in the pilot system, the pilot system components should be removed before cleaning.

- Use a 1/8" size drill bit with a drill-stop to remove the pilot screw plug. Set the drill-stop 6 mm from the end of the bit to prevent drilling into the pilot screw. Carefully drill through the plug.
- Thread a self-tapping sheet metal screw into the plug. Pull on the screw head with pliers to remove the plug. Carefully clean any metal shavings from the area.
- Slowly turn the pilot screw clockwise and count the number of turns until the screw is lightly seated. Make a note of how many turns were made so the screw can be reset correctly after cleaning.
- Remove the pilot screw along with the spring, washer, and O-ring.
- After cleaning, reinstall the pilot screw to the original setting by turning the screw in until it lightly seats, and then backing it out the same number of turns counted during disassembly.
- Install a new plug by tapping it into place with a punch.

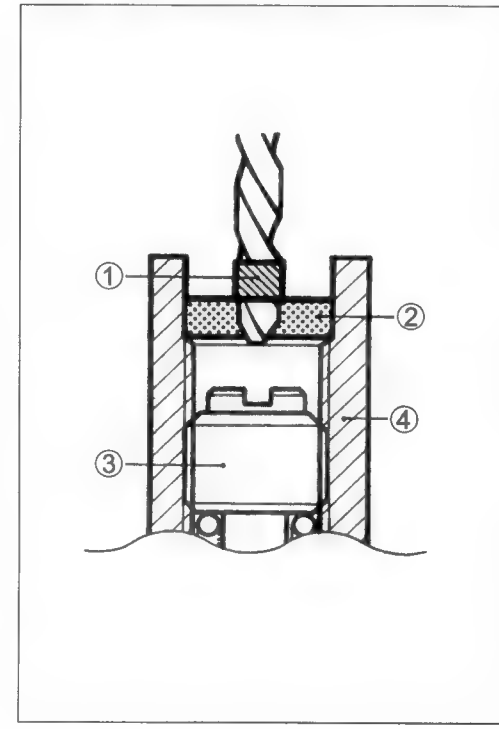

① Drill-stop
② Plug
③ Pilot screw
④ Carburetor body

CARBURETOR CLEANING

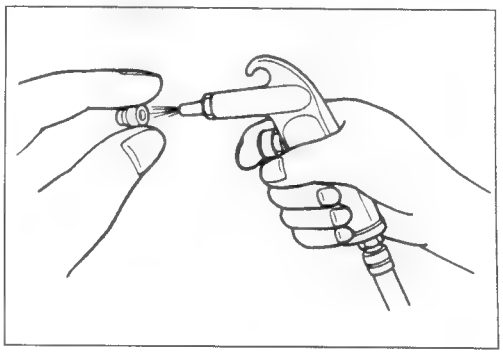

⚠ WARNING

Some carburetor cleaning chemicals, especially dip-type soaking solutions, are very corrosive and must be handled carefully. Always follow the chemical manufacturer's instructions on proper use, handling and storage.

- Clean all jets with a spray-type carburetor cleaner and dry them using compressed air.
- Clean all circuits of the carburetor thoroughly – not just the perceived problem area. Clean the circuits in the carburetor body with a spray-type cleaner and allow each circuit to soak, if necessary, to loosen dirt and varnish. Blow the body dry using compressed air.

⚠ CAUTION

Do not use a wire to clean the jets or passageways. A wire can damage the jets and passageways. If the components cannot be cleaned with a spray cleaner it may be necessary to use a dip-type cleaning solution and allow them to soak. Always follow the chemical manufacturer's instructions for proper use and cleaning of the carburetor components.

- After cleaning, reassemble the carburetor with new seals and gaskets.

CARBURETOR HEATER INSPECTION

(Only for E-02)

- Remove the carburetor assembly. (☞4-14)
- Disconnect the carburetor heater terminal lead wires.
- Connect the positive ⊕ terminal of a 12V battery to the terminal ① of the carburetor heater and the battery negative ⊖ terminal to the terminal ②.
- Check that the heater section Ⓐ is heated in 5 minutes after the battery has been connected. If the carburetor heater is not heated up, replace the carburetor heater with a new one.

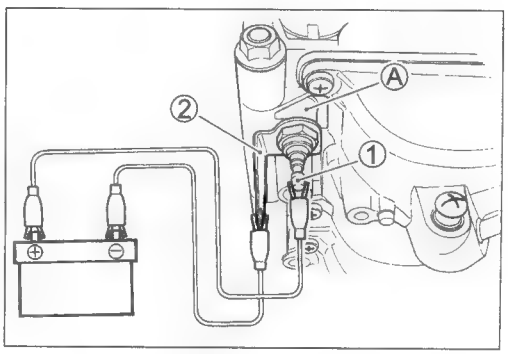

⚠ WARNING

Do not touch the carburetor heater directly to prevent burn.

THERMO-SWITCH INSPECTION

(Only for E-02)

- Cool the thermo-switch ① with ice water and check for continuity.

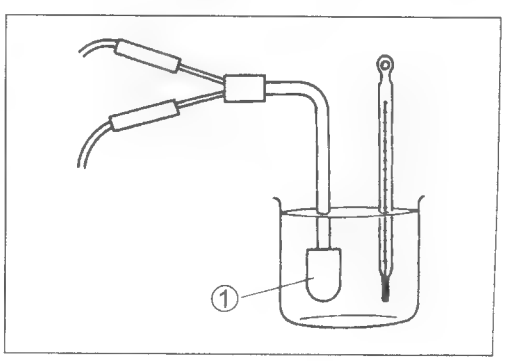

TOOL 09900-25008: Multi-circuit tester

DATA

Thermo-switch continuity	Below 8 – 14°C	Yes
	Above 15 – 21°C	No

CARBURETOR INSPECTION

Check the following items for any damage or clogging.

* Pilot jet
* Main jet
* Main air jet
* Pilot air jet
* Needle jet air bleeding hole
* Float
* Needle valve
* Jet needle
* Valve seat
* Piston valve
* Starter (enricher) jet
* Gasket and O-ring
* Throttle shaft oil seal
* Diaphragm
* Pilot outlet and by-pass ports

NEEDLE VALVE INSPECTION

If foreign matter is caught between the valve seat and the needle valve, the gasoline will continue flowing and overflow. If the valve seat and needle valve are worn beyond the permissible limits, similar trouble will occur. Conversely, if the needle valve sticks, the gasoline will not flow into the float chamber. Clean the float chamber and float parts with gasoline. If the needle valve is worn, as shown in the illustration, replace it along with a new valve seat. Clean the fuel passage of the mixing chamber using compressed air.

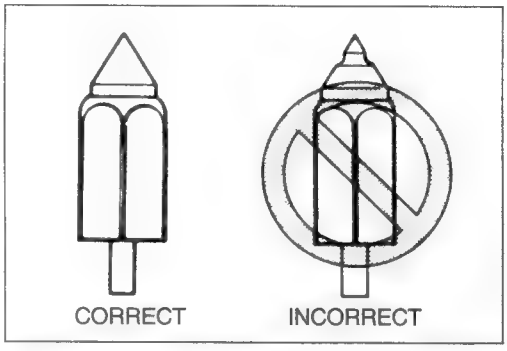

FLOAT HEIGHT ADJUSTMENT

To check the float height, turn the carburetor upside down.
Measure the float height Ⓐ while the float arm is just contacting the needle valve using vernier calipers.
Bend the tongue ① as necessary to bring the float height Ⓐ to the specified level.

TOOL 09900-20102: Vernier calipers

DATA Float height Ⓐ: 17.0 ± 1.0 mm (0.67 ± 0.04 in)

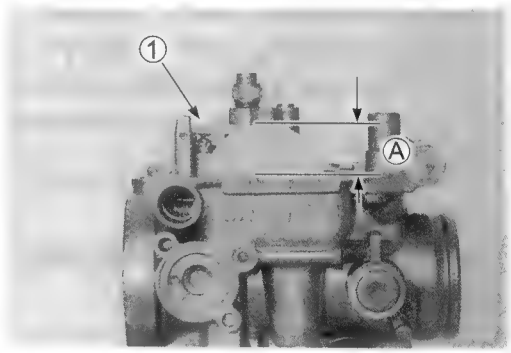

THROTTLE POSITION SENSOR INSPECTION

Measure the resistance between the terminals as shown.

DATA Throttle position sensor resistance: Approx. 5 kΩ

NOTE:
When performing this test, it is not necessary to remove the throttle position sensor.

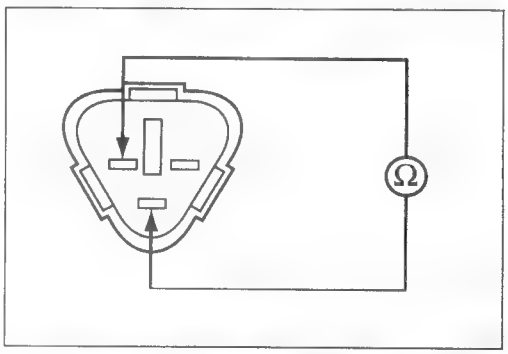

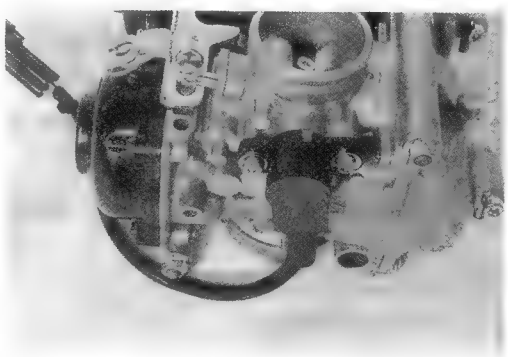

REASSEMBLY

Reassemble the carburetors in the reverse order of disassembly. Pay attention to the following points.

THROTTLE VALVE

- Turn the throttle stop screw and throttle valve synchronizing screw until the throttle valve's bottom end ① is aligned with the foremost by-pass port ② as shown.
- Apply a small quantity of THREAD LOCK "1342" to the throttle valve mounting screws and tighten them.

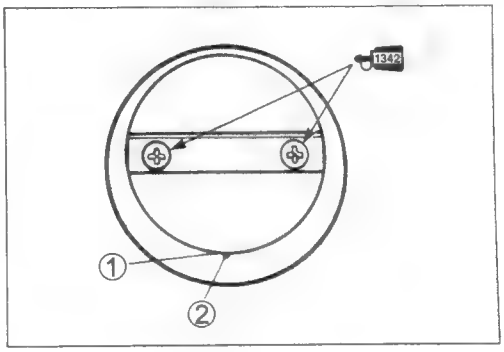

1342 99000-32050: THREAD LOCK "1342"

⚠ CAUTION

Face the stamped side of the throttle valve out.

PILOT SCREW

- After cleaning, reinstall the pilot screw to the original setting by turning the screw in until it lightly seats, and then backing it out the same number of turns counted during disassembly.

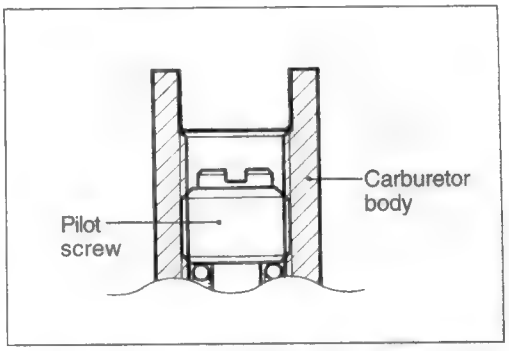

⚠ CAUTION

Replace the O-ring with a new one.

CARBURETOR ENGAGEMENT

- Position the throttle valve control lever ① between the throttle valve synchronizing screw and spring as shown.

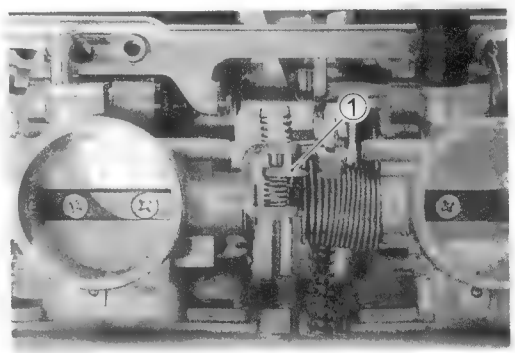

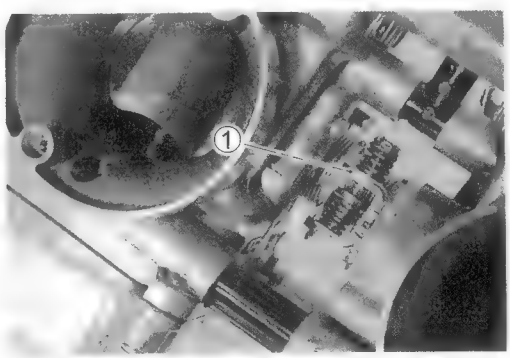

CARBURETOR HEATER

- Apply thermo-grease to the threads and tighten the carburetor heater. (Only for E-02)

G 99000-59029: THERMO-GREASE

Carburetor heater: 3 N·m (0.3 kgf·m, 2 lb-ft)

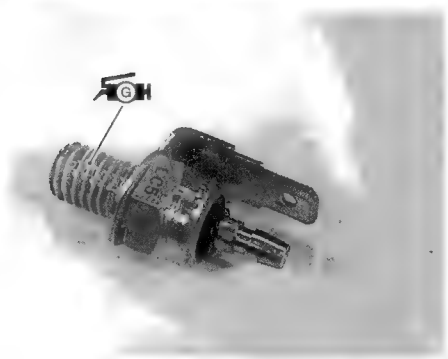

THROTTLE POSITION SENSOR POSITIONING

Install the throttle position sensor as described below.

- Measure the resistance (Ω1) between the throttle position sensor terminals as shown.

DATA Throttle position sensor resistance (Ω1): Approx. 5 kΩ

- Measure the resistance (Ω2) between the throttle position sensor terminals as shown.
- Fully open the throttle valve with the throttle lever.
- Position the throttle position sensor until resistance (Ω2) is 3.09 – 4.63 kΩ.
- When the resistance (Ω2) is within specification, tighten the throttle position sensor mounting screws.

DATA Throttle position sensor resistance (Ω2):
3.09 – 4.63 kΩ

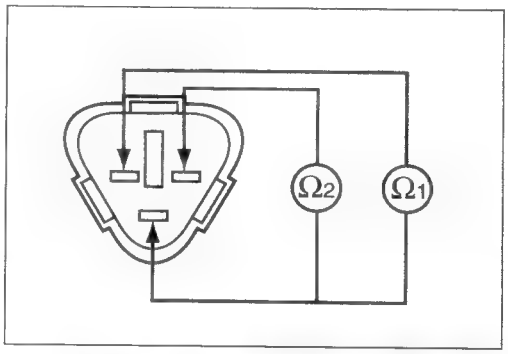

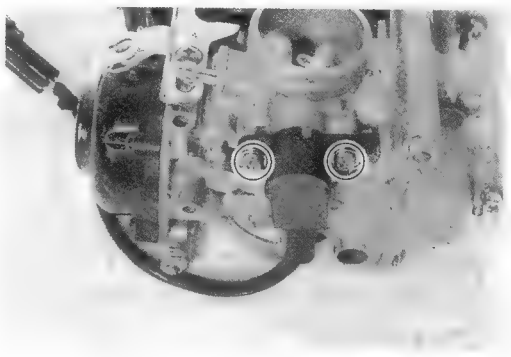

REMOUNTING

Remount the carburetor assembly in the reverse order of removal. Pay attention to the following points.

CARBURETOR CLAMPS

Position the carburetor clamps as shown.

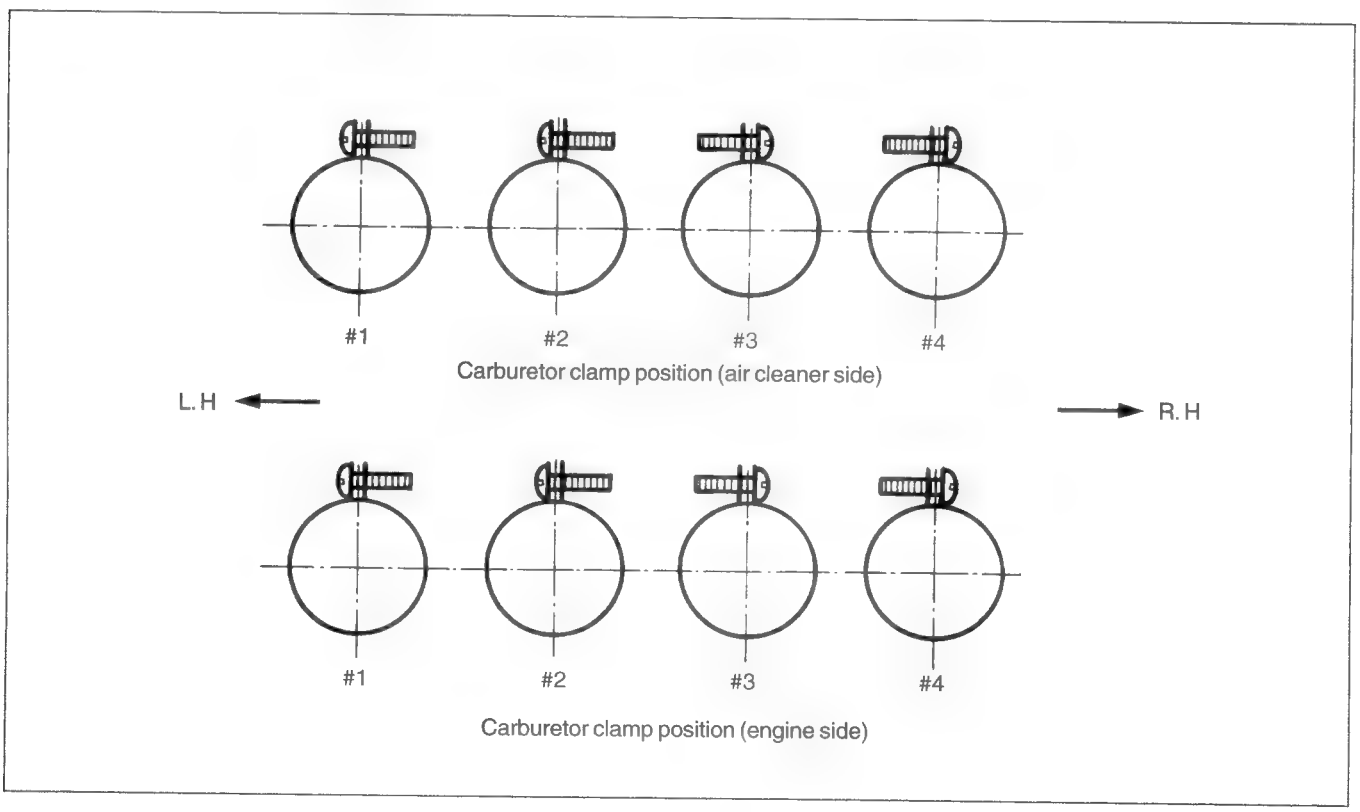

THROTTLE CABLE ADJUSTMENT (MAJOR ADJUSTMENT)

NOTE:
Minor adjustment can be made by the throttle grip side adjuster. (☞2-10)

- Remove the fuel tank. (☞4-3)
- Loosen the lock nut ① of the throttle returning cable.
- Turn the returning cable adjuster ② to obtain proper cable play.
- Loosen the lock nut ③ of the throttle pulling cable.
- Turn the pulling cable adjuster ④ in or out until the throttle cable play Ⓐ of 2.0 – 4.0 mm (0.08 – 0.16 in) at the throttle grip is obtained.
- Tighten the lock nut ③ securely while holding the adjuster ④.
- While holding the throttle grip at the fully closed position, slowly turn the returning cable adjuster ② to obtain a cable slack Ⓑ of 1.0 mm (0.04 in).
- Tighten the lock nut ① securely.

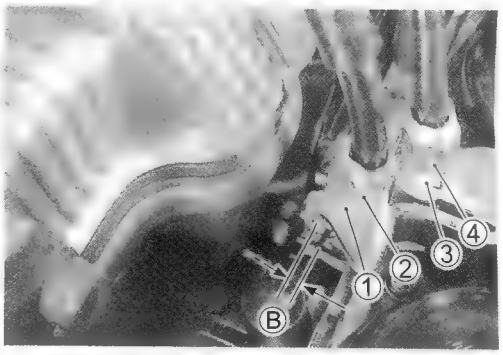

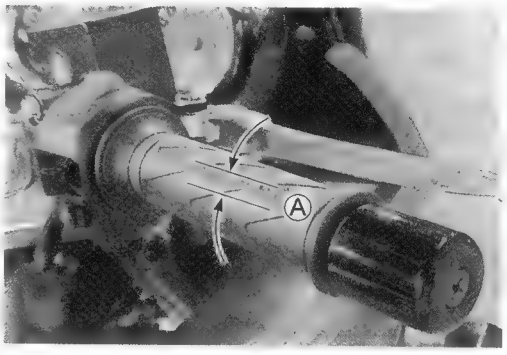

- After all of the work has been completed, install the carburetor assembly onto the engine and perform the following adjustments.
  * Engine idle speed ..... ☞2-11
  * Throttle cable play ..... ☞2-11
  * Carburetor synchronization ..... ☞4-23

CARBURETOR SYNCHRONIZATION

Check and adjust the carburetor synchronization among the four carburetors as follows.

NOTE:
Remove the fuel tank and connect a remote fuel bottle to the fuel hose.

CALIBRATING THE CARBURETOR BALANCER

- Disconnect the vacuum hoses ① (for fuel valve) and ② (for PAIR valve) from carburetors #4 and #3, and install a cap of the proper size to each carburetor's vacuum inlet.
- Start the engine and let it run at idle until it is warmed up.
- Stop the engine.

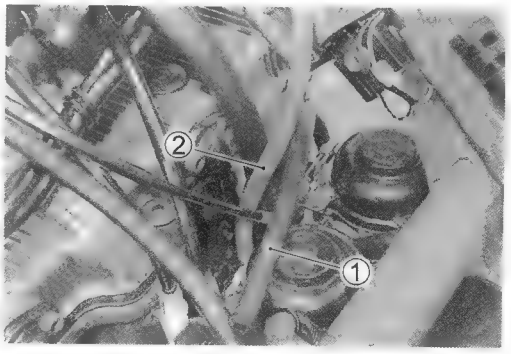

- Remove the vacuum inlet cap ③ from the carburetor (for cylinders #1 or #4).

- Connect one of the carburetor balancer's rubber hoses to this inlet.

09913-13121: Carburetor balancer

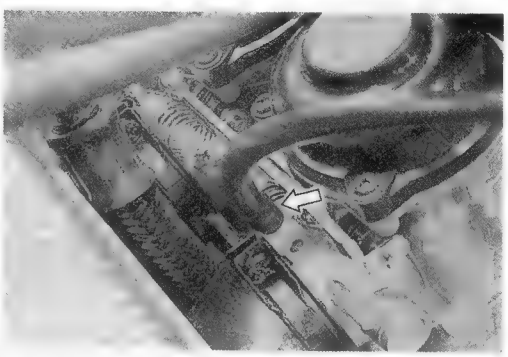

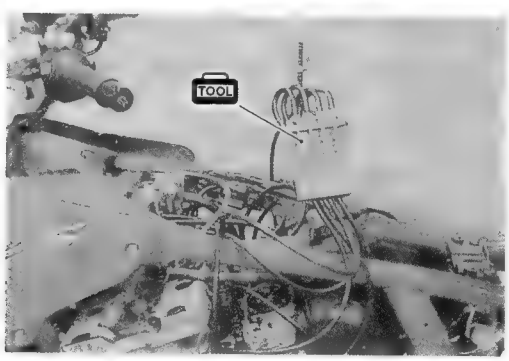

- Start the engine and let it run at 1 750 r/min.
  Adjust the engine speed by turning the throttle stop screw.

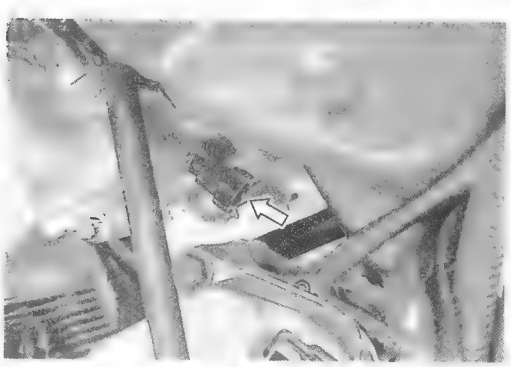

- Turn the air screw ① of the carburetor balancer so that the vacuum pressure causes the steel ball ② to rise to the center line ③ of the tube.

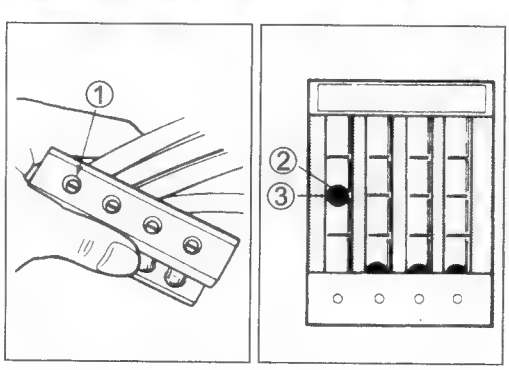

- After making sure that the steel ball remains at the center line, disconnect the hose from the vacuum inlet and connect the next hose to the vacuum inlet.
- Turn the air screw for this tube until the steel ball ④ is at the center line of its respective tube.
- Repeat the above procedure on the third and fourth hoses.

The carburetor balancer is now ready to be used to synchronize the carburetors.

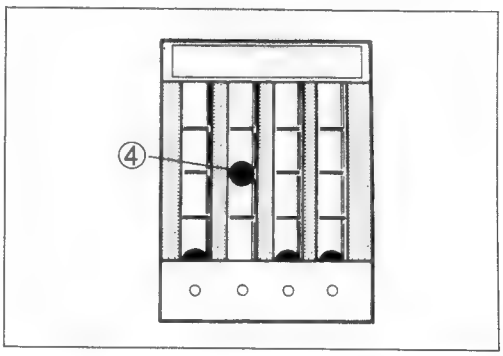

CARBURETOR SYNCHRONIZATION

Remove all of the vacuum inlet caps, before synchronizing the carburetors. Connect the carburetor balancer hoses to these vacuum inlets and then adjust the carburetors as follows.

- Start the engine and keep it running at 1 750 r/min. Observe the tachometer reading.

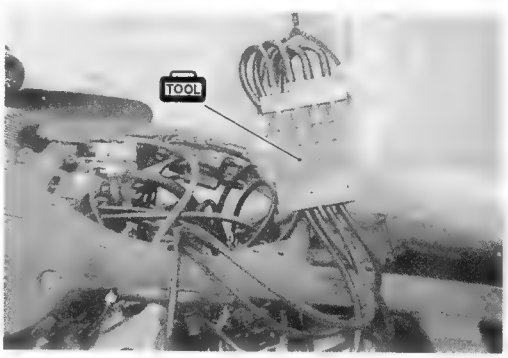

- When the steel balls in tubes #1, #2, #3 and #4 are at the same level, the carburetor is correctly adjusted.

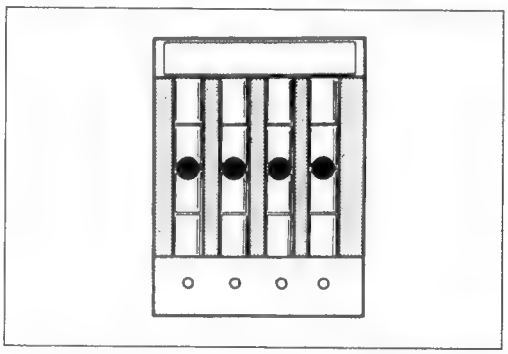

- If the steel balls are not at the same level, adjust the throttle valve synchronizing screws ①, ② and ③.
  Adjusting order is as follows.
  ① → ② → ③

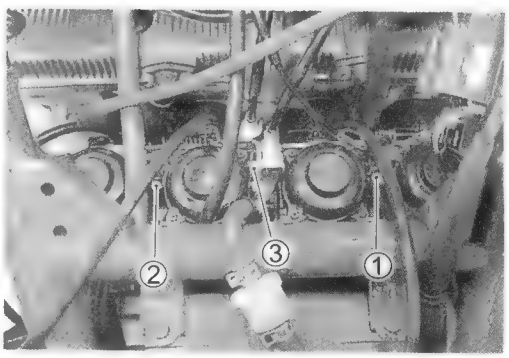

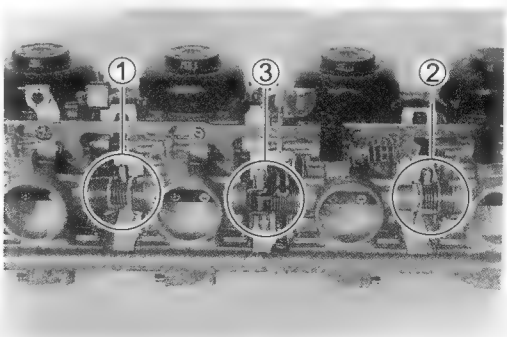

- After balancing the carburetor, set the engine speed by turning the throttle stop screw.
  Observe the tachometer reading.

DATA **Engine speed: 1 200 ± 100 r/min**

CHASSIS

CONTENTS

EXTERIOR PARTS 5- 2
CONSTRUCTION 5- 2
REMOVAL 5- 3
REMOUNTING 5- 6
FRONT WHEEL 5- 7
CONSTRUCTION 5- 7
REMOVAL 5- 9
INSPECTION AND DISASSEMBLY 5- 9
REASSEMBLY 5-10
REMOUNTING 5-11
FRONT FORK 5-12
CONSTRUCTION 5-12
REMOVAL AND DISASSEMBLY 5-13
INSPECTION 5-15
REASSEMBLY AND REMOUNTING 5-16
STEERING 5-20
CONSTRUCTION 5-20
REMOVAL AND DISASSEMBLY 5-20
INSPECTION AND DISASSEMBLY 5-22
REASSEMBLY AND REMOUNTING 5-22
STEERING TENSION ADJUSTMENT 5-25
REAR WHEEL 5-26
CONSTRUCTION 5-26
REMOVAL 5-28
INSPECTION AND DISASSEMBLY 5-29
REASSEMBLY 5-30
REMOUNTING 5-31
REAR SUSPENSION 5-32
CONSTRUCTION 5-32
REMOVAL 5-34
INSPECTION AND DISASSEMBLY 5-35
REASSEMBLY 5-37
REAR SHOCK ABSORBER DISPOSAL 5-38
REMOUNTING 5-39
FINAL INSPECTION AND ADJUSTMENT 5-40
SUSPENSION SETTING 5-40
FRONT BRAKE 5-41
CONSTRUCTION 5-41
BRAKE PAD REPLACEMENT 5-42
BRAKE FLUID REPLACEMENT 5-42
BRAKE CALIPER REMOVAL AND DISASSEMBLY 5-43
BRAKE CALIPER INSPECTION 5-44
BRAKE CALIPER REASSEMBLY AND REMOUNTING 5-45
BRAKE DISC INSPECTION 5-46
BRAKE DISC REMOVAL AND REMOUNTING 5-46
MASTER CYLINDER REMOVAL AND DISASSEMBLY 5-47
MASTER CYLINDER INSPECTION 5-48
MASTER CYLINDER REASSEMBLY AND REMOUNTING 5-49
REAR BRAKE 5-51
CONSTRUCTION 5-51
BRAKE PAD REPLACEMENT 5-52
BRAKE FLUID REPLACEMENT 5-52
BRAKE CALIPER REMOVAL AND DISASSEMBLY 5-53
BRAKE CALIPER INSPECTION 5-54
BRAKE CALIPER REASSEMBLY AND REMOUNTING 5-54
MASTER CYLINDER REMOVAL AND DISASSEMBLY 5-55
MASTER CYLINDER INSPECTION 5-56
MASTER CYLINDER REASSEMBLY AND REMOUNTING 5-57
TIRES AND WHEELS 5-58
TIRE REMOVAL 5-58
INSPECTION 5-58
TIRE INSTALLATION 5-59

EXTERIOR PARTS

CONSTRUCTION

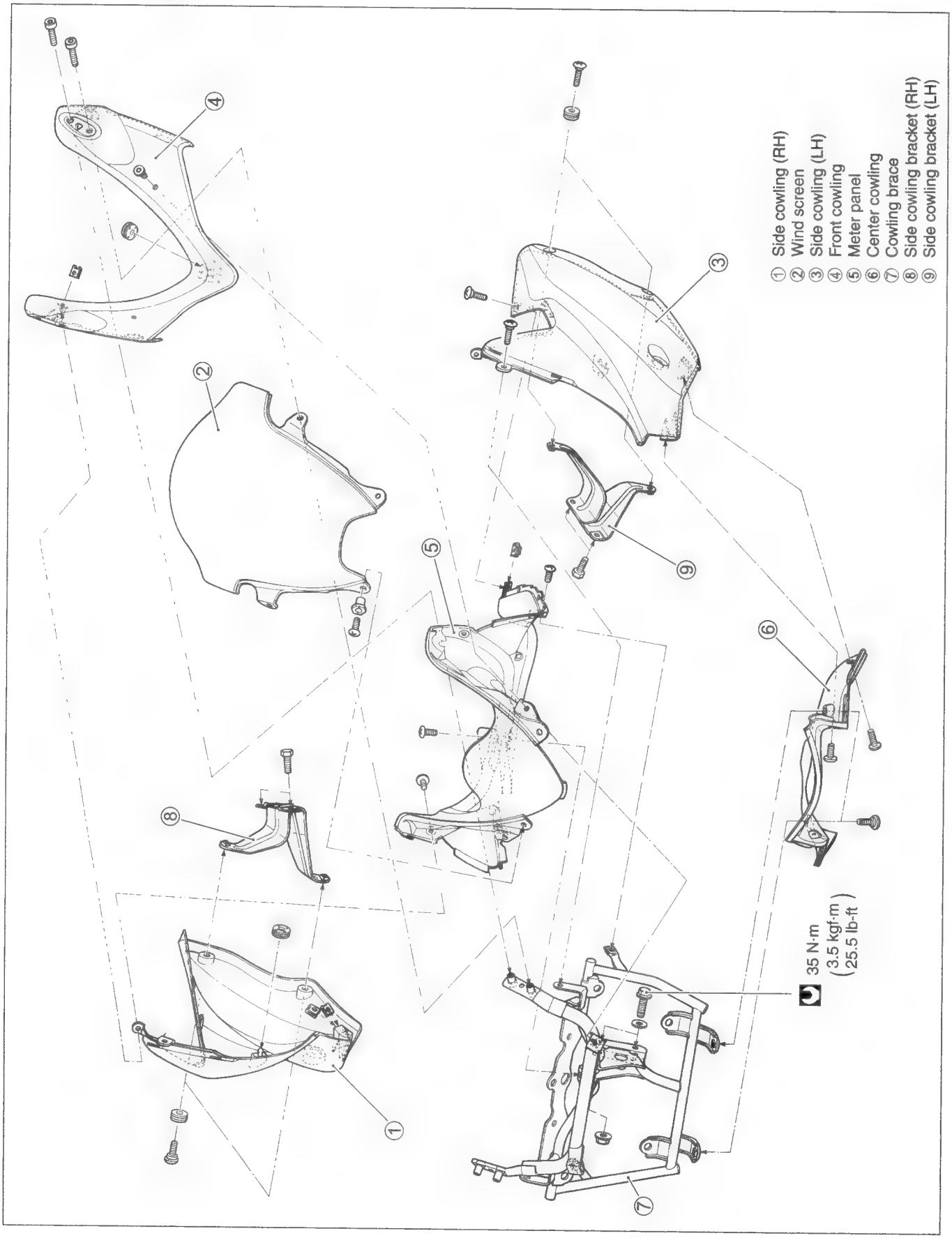

REMOVAL

COWLING AND COWLING BRACE (Except for GSF600)

- Remove the two screws.

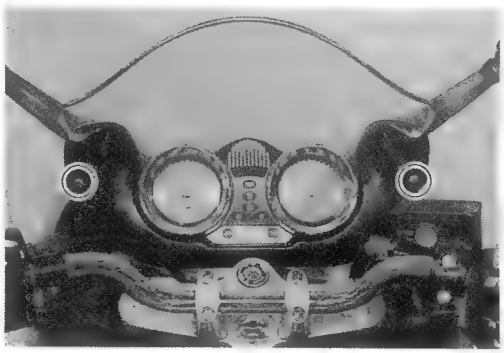

- Remove the rear view mirrors ① and the front cowling ②.

☆ Hooked part

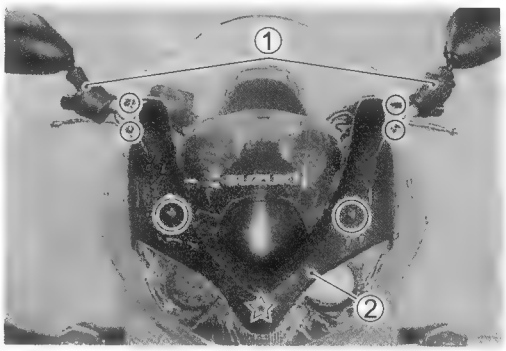

- Remove the center cowling ③.

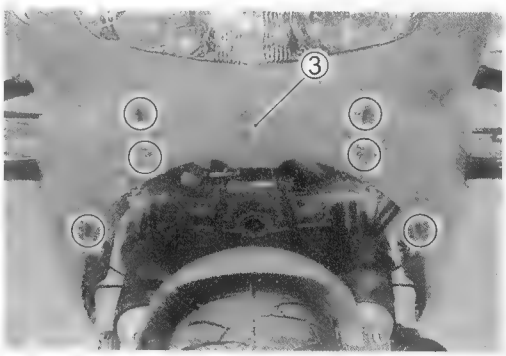

- Remove the side cowling ④ (left and right).
- Disconnect the turn signal lead wire coupler.

☆ Hooked part

- Remove the screen ⑤.

- Disconnect the headlight and position light lead wire coupler.
- Remove the headlight assy ⑥.
  (Remove the screws both left and right side)

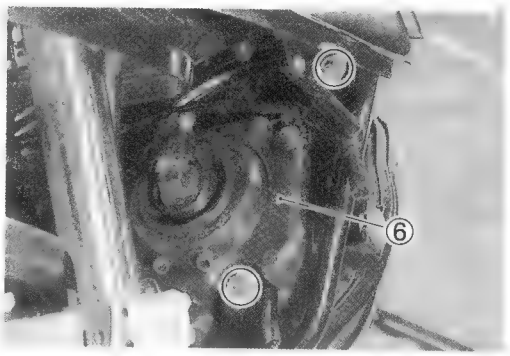

- Remove the combination meter ⑦. (☞6-33)

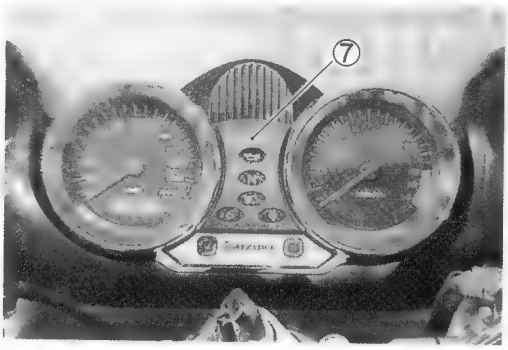

- Remove the three screws and the upper panel ⑧.

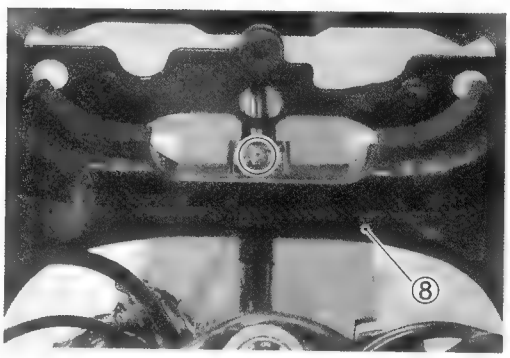

- Remove the wiring harness clamps.
- Remove the fairing brace ⑨.

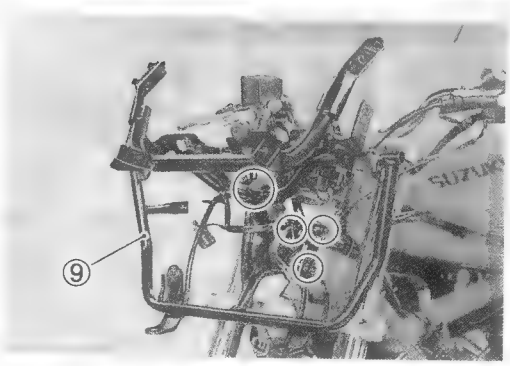

SEAT

- Remove the seat ① by using the ignition key.

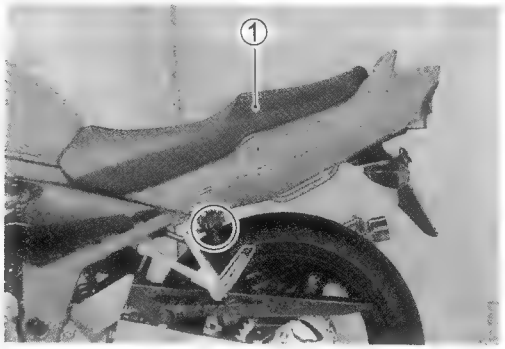

DOCUMENT TRAY

- Remove the seat. (☞ 5-5)
- Remove the document tray ①.

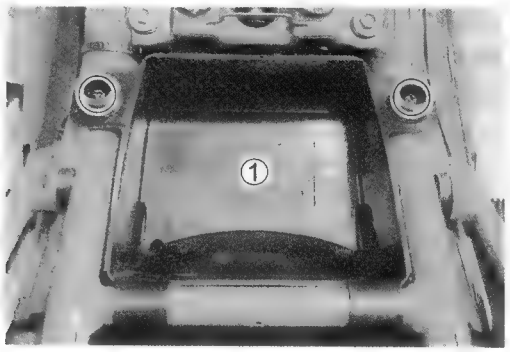

FRAME COVER

- Remove the seat. (☞ 5-5)
- Remove the passenger grab handle ①.

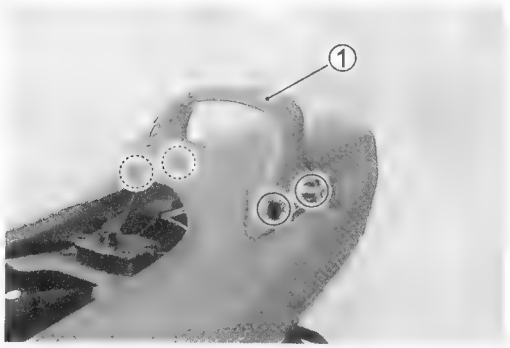

- Disconnect the brake light/taillight coupler ②.

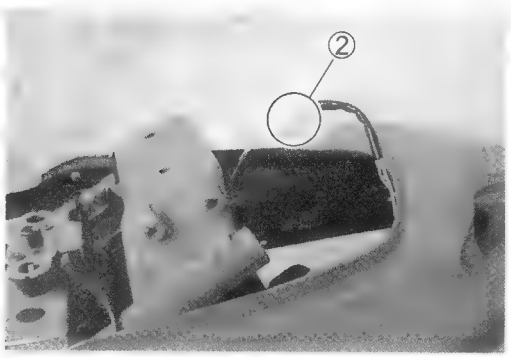

- Remove the frame covers ③ (left and right side).

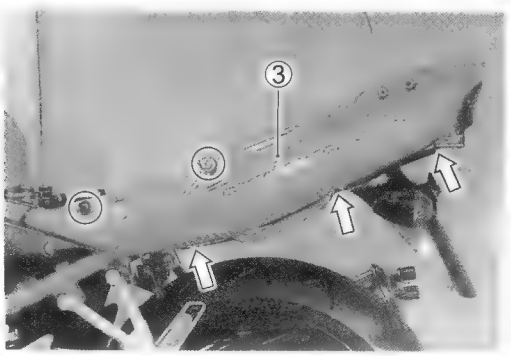

SIDE FRAME COVER

- Remove the side frame cover ① (left and right side).

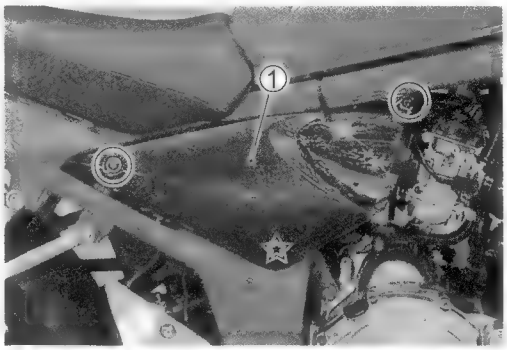

☆ Hooked part

REMOUNTING

Remount the cowling, cowling brace, seat and frame covers in the reverse order of removal.

FRONT WHEEL

CONSTRUCTION

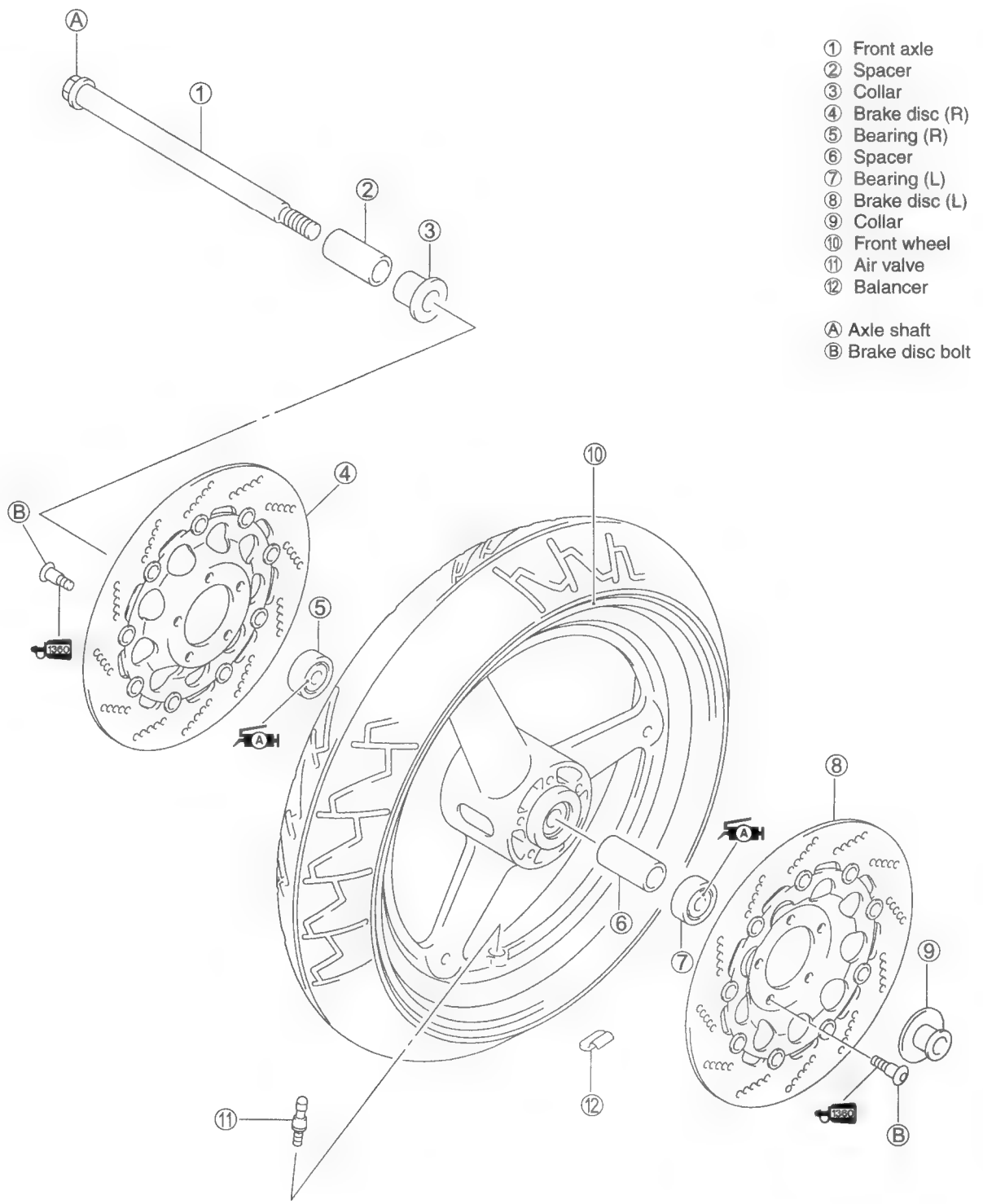

① Front axle
② Spacer
③ Collar
④ Brake disc (R)
⑤ Bearing (R)
⑥ Spacer
⑦ Bearing (L)
⑧ Brake disc (L)
⑨ Collar
⑩ Front wheel
⑪ Air valve
⑫ Balancer

Ⓐ Axle shaft
Ⓑ Brake disc bolt

ITEM	N·m	kgf·m	lb-ft
Ⓐ	65	6.5	47.0
Ⓑ	23	2.3	16.5

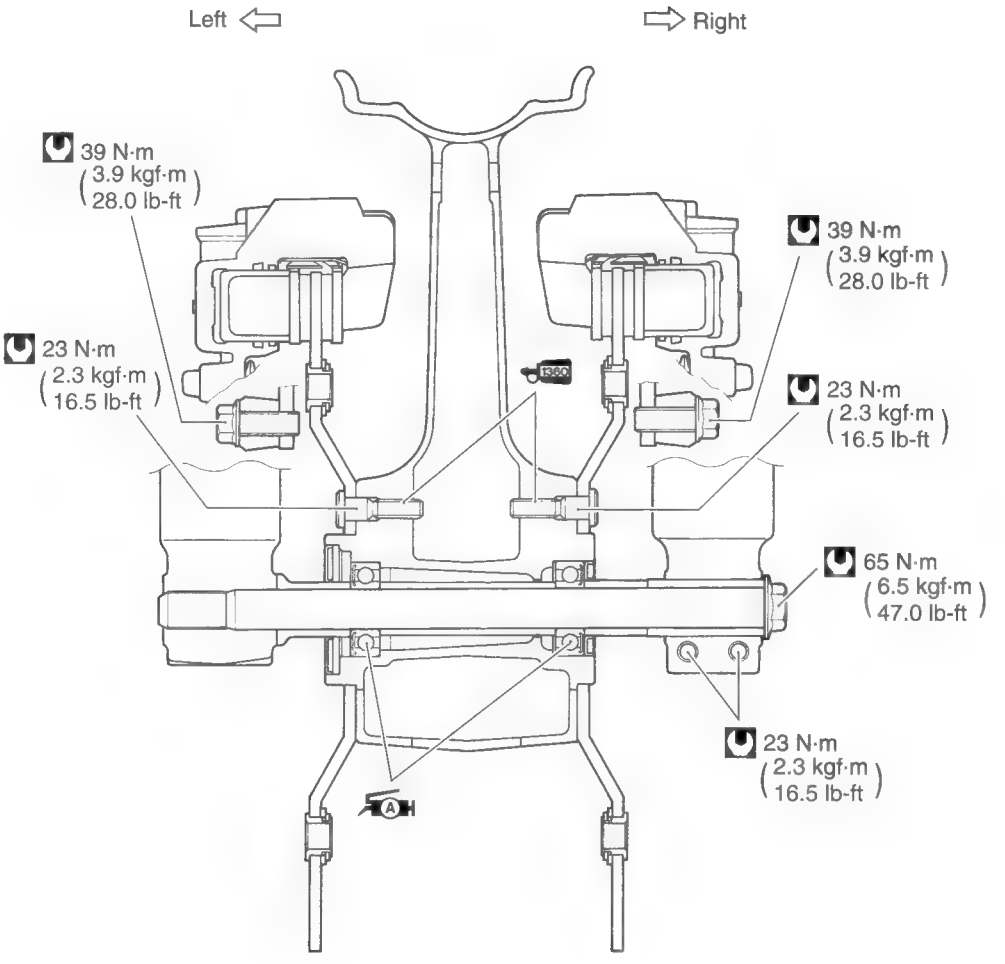
Left
Right
39 N·m
(3.9 kgf·m
28.0 lb-ft)
39 N·m
(3.9 kgf·m
28.0 lb-ft)
23 N·m
(2.3 kgf·m
16.5 lb-ft)
23 N·m
(2.3 kgf·m
16.5 lb-ft)
65 N·m
(6.5 kgf·m
47.0 lb-ft)
23 N·m
(2.3 kgf·m
16.5 lb-ft)
T360
A

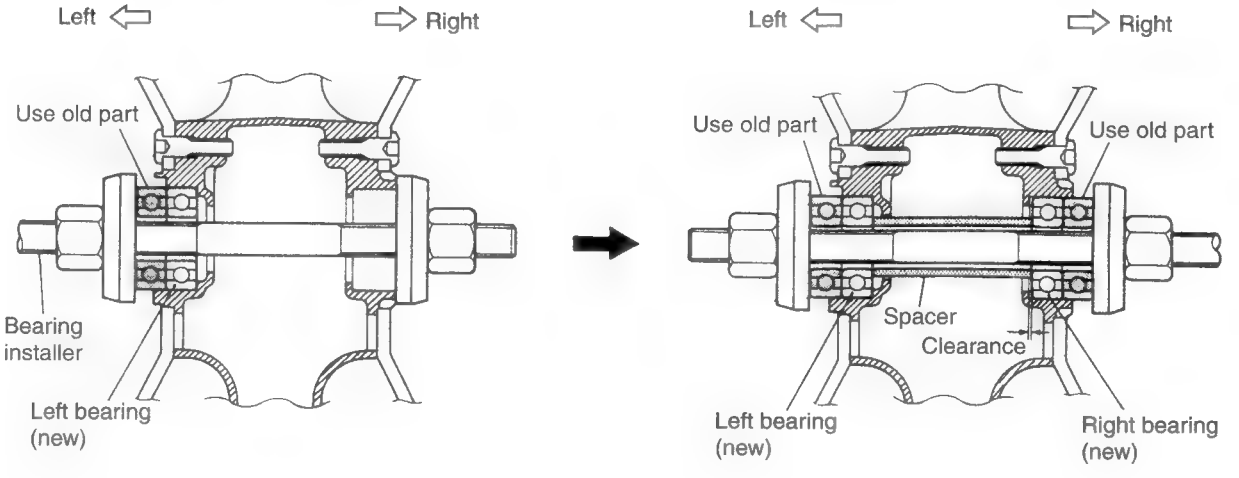
Left
Right
Use old part
Bearing
installer
Left bearing
(new)
Left
Right
Use old part
Use old part
Spacer
Clearance
Left bearing
(new)
Right bearing
(new)

REMOVAL

- Remove the reflectors ①. (For E-03, E-28, E-33)
- Remove the brake caliper mounting bolts ②.

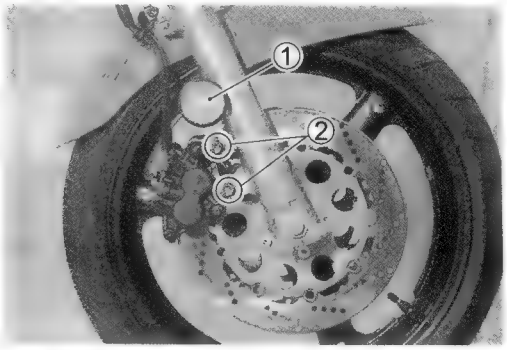

- Loosen the front axle pinch bolt ③.
- Loosen the front axle ④.
- Raise the front wheel off the ground using a jack or wooden block.
- Remove the front wheel.

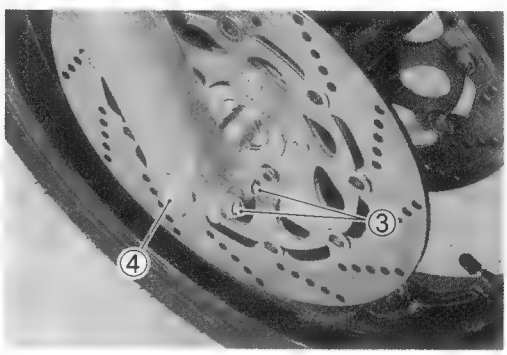

⚠ CAUTION

Do not operate the brake lever during or after brake caliper removal.

NOTE:
After removing the front wheel, temporarily install the brake calipers.

INSPECTION AND DISASSEMBLY

TIRE (☞ 5-58)

FRONT WHEEL

Make sure that the wheel runout (axial and radial) does not exceed the service limit when checked as shown. An excessive amount of runout is usually due to worn or loose wheel bearings and can be corrected by replacing the bearings. If bearing replacement fails to reduce the runout, replace the wheel.

DATA Wheel rim runout (axial and radial)
Service Limit: 2.0 mm (0.08 in)

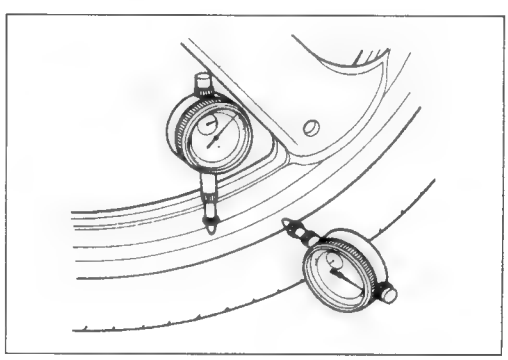

WHEEL BEARINGS

Inspect the play of the wheel bearings by hand while they are in the wheel. Rotate the inner race by hand to inspect it for abnormal noise and smooth rotation.
Replace the wheel bearings if there is anything unusual. Remove the wheel bearings as follows:

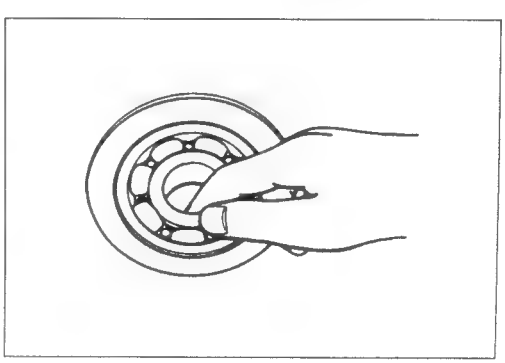

• Remove the bearing using the special tool.

TOOL **09921-20220: Bearing remover set**

⚠ CAUTION

*** The removed bearings should be replaced with new ones.**
*** Do not stress the brake discs by using wooden block under the wheel.**

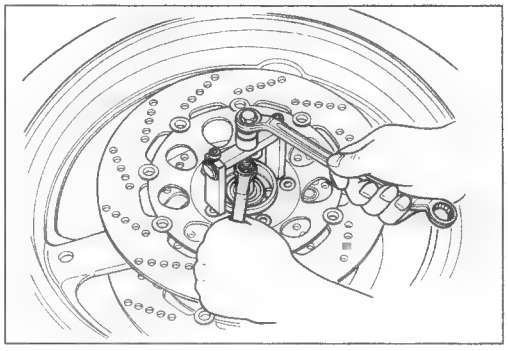

FRONT AXLE

Measure the front axle runout using the dial gauge.
If the runout exceeds the service limit, replace the front axle.

TOOL **09900-20606: Dial gauge (1/100 mm)**
09900-20701: Magnetic stand
09900-21304: V-block set (100 mm)

DATA **Wheel axle runout**
Service Limit: 0.25 mm (0.010 in)

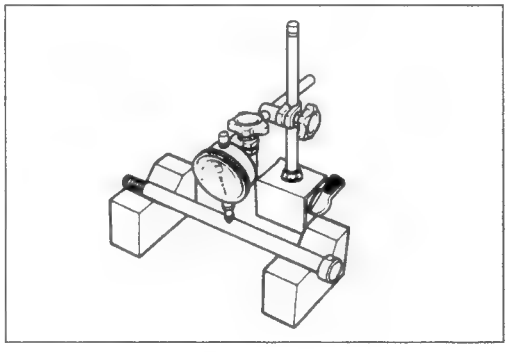

REASSEMBLY

• Apply SUZUKI SUPER GREASE "A" to the bearings before installation.

For USA

99000-25030: SUZUKI SUPER GREASE "A"

For the other countries

99000-25010: SUZUKI SUPER GREASE "A"

• Install the wheel bearings using the used bearings and special tool as described below.

TOOL **09924-84510: Bearing installer set**

⚠ CAUTION

First install the left wheel bearing, then install the right wheel bearing. (☞ 5-8)
The sealed cover on the bearing must face to the outside.

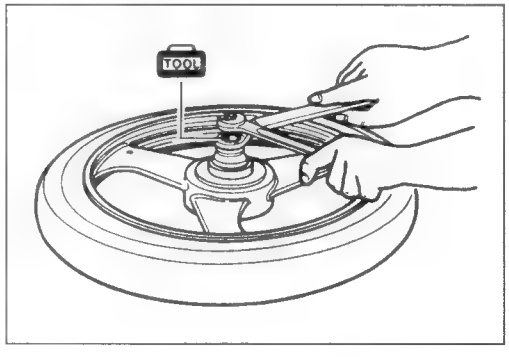

REMOUNTING

Remount the front wheel in the reverse order of removal. Pay attention to the following points:

- Install the front wheel.

⚠ WARNING

Face the arrow mark Ⓐ on the tire to the direction of wheel rotation, when remounting the wheel.

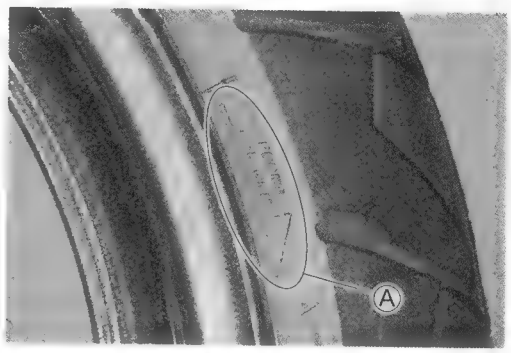

- Tighten the front axle ① to the specified torque.

Front axle: 65 N·m (6.5 kgf·m, 47.0 lb-ft)

- Tighten the front axle pinch bolts ② to the specified torque.

Front axle pinch bolt: 23 N·m (2.3 kgf·m, 16.5 lb-ft)

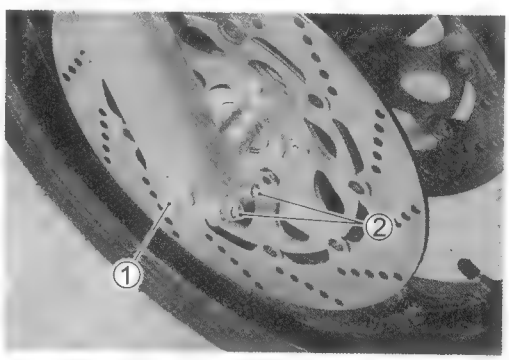

NOTE:
Before tightening the front axle nut and front axle nut pinch bolts, move the front fork up and down four or five times.

- Tighten the brake caliper mounting bolts ① to the specified torque.

Brake caliper mounting bolt: 39 N·m (3.9 kgf·m, 28.0 lb-ft)

NOTE:
After remounting the brake calipers, pump the brake lever a few times to check for proper brake operation.

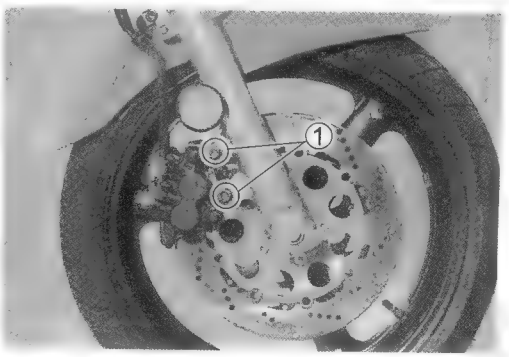

FRONT FORK

CONSTRUCTION

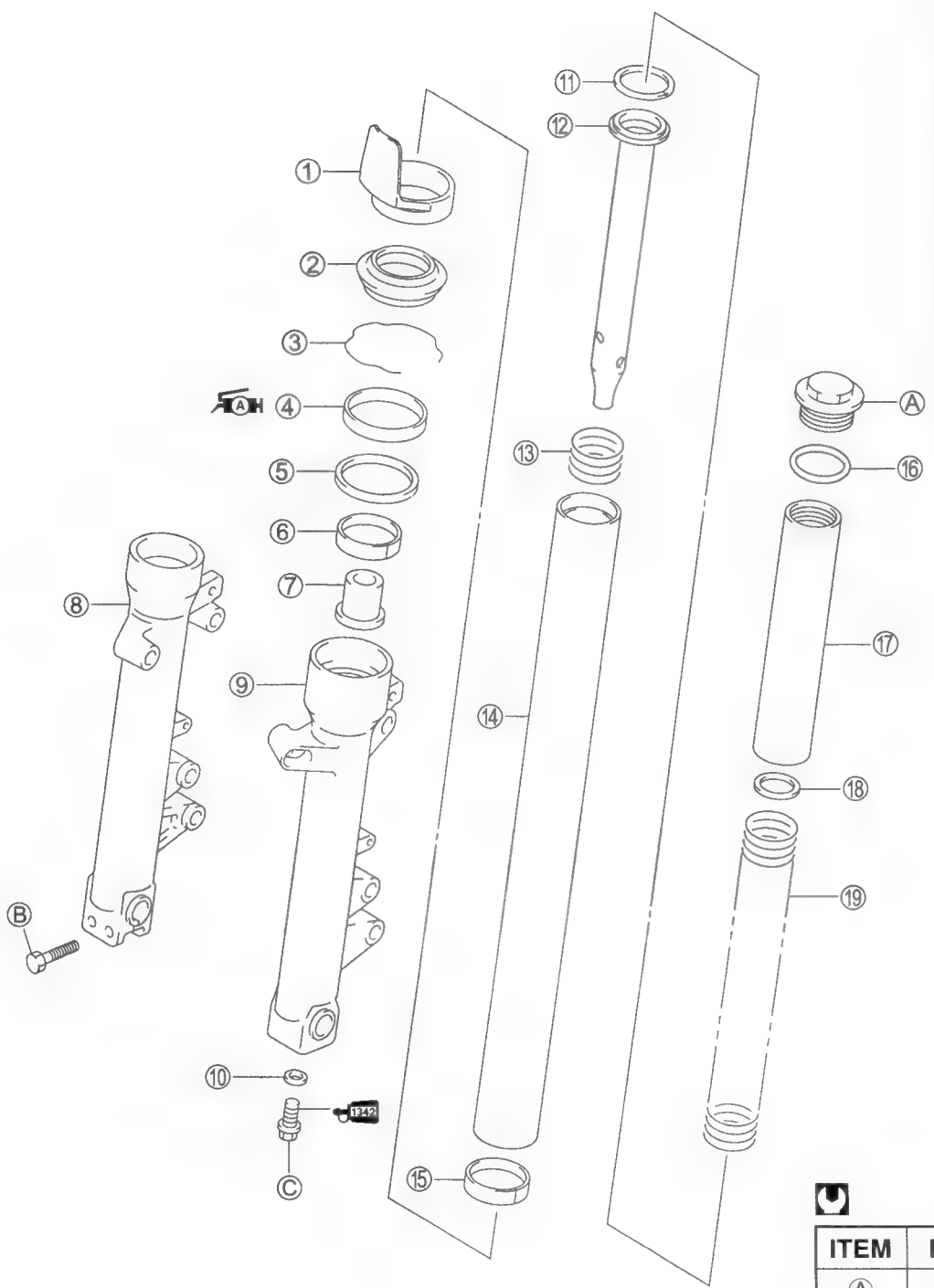

ITEM	N·m	kgf·m	lb-ft
Ⓐ	23	2.3	16.5
Ⓑ	23	2.3	16.5
Ⓒ	30	3.0	21.5

REMOVAL AND DISASSEMBLY

- Remove the center cowling. (☞ 5-3)
- Remove the front wheel. (☞ 5-9)

- Remove the front fender mounting bolts ① (left and right side).
- Remove the front fender ②.
- Remove the brake hose clamp bolt ③ (left and right side).

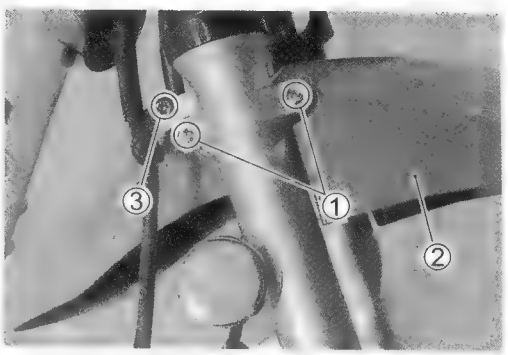

- Loosen the front fork upper pinch bolt ④.

NOTE:
Slightly loosen the front fork cap bolt ⑤ to facilitate later disassembly.

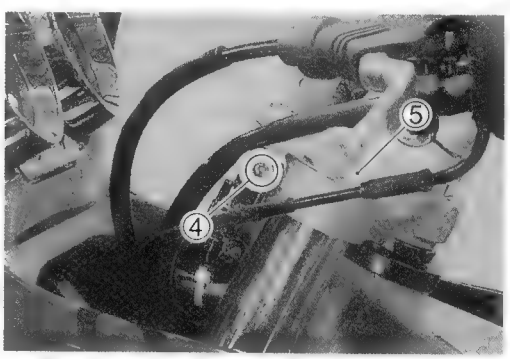

- Loosen the front fork lower pinch bolts ⑥.
- Remove the front fork.

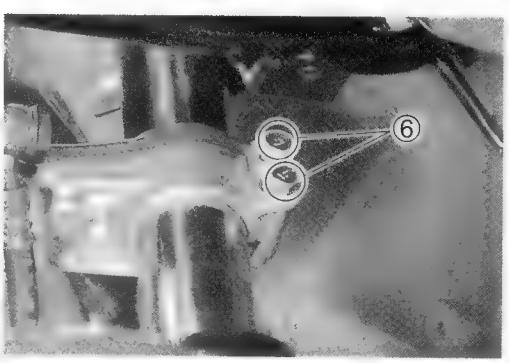

- Loosen the front fork cap bolt ⑦.

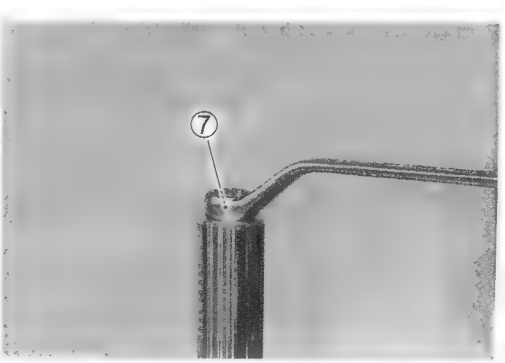

- Remove the front fork cap bolt ①, spacer ②, washer ③ and fork spring ④.

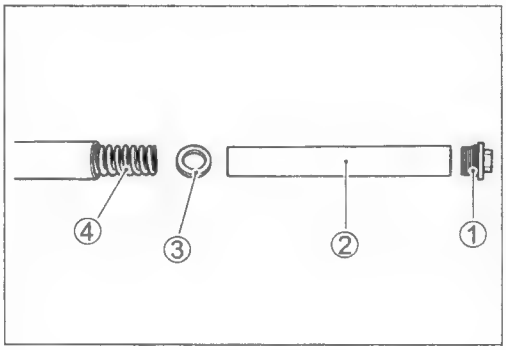

- Invert the front fork and stroke it several times to drain out fork oil.
- Hold the front fork in the inverted position for a few minutes to allow the fork oil to fully drain.

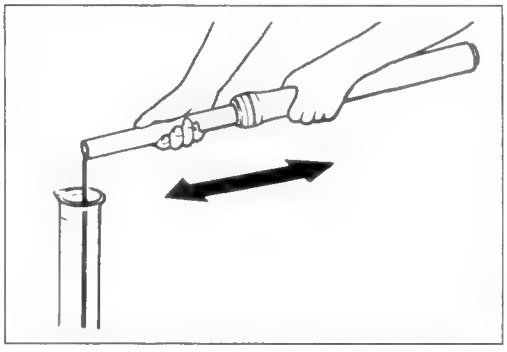

- Remove the dust seal ⑤ and oil seal stopper ring ⑥.

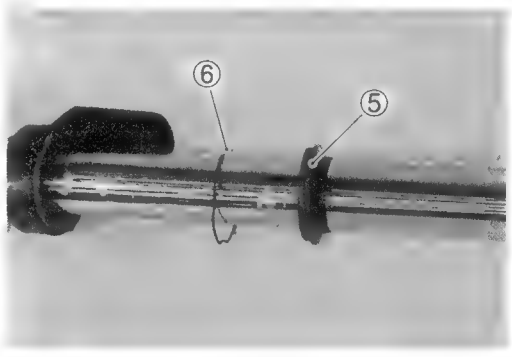

- Remove the cylinder bolt ⑦.

NOTE:
If you cannot remove the cylinder bolt, use an impact wrench.

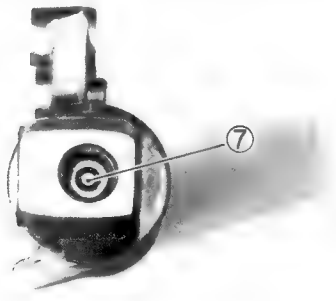

- Remove the cylinder ⑧ and rebound spring ⑨.

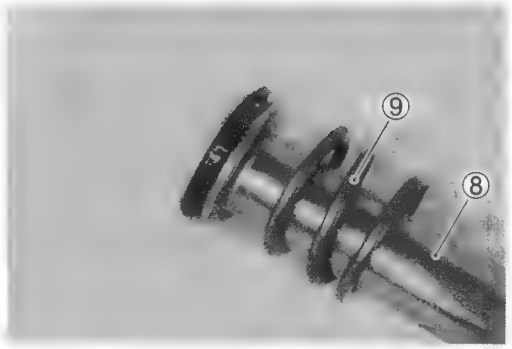

• Remove the protecter ⑩.

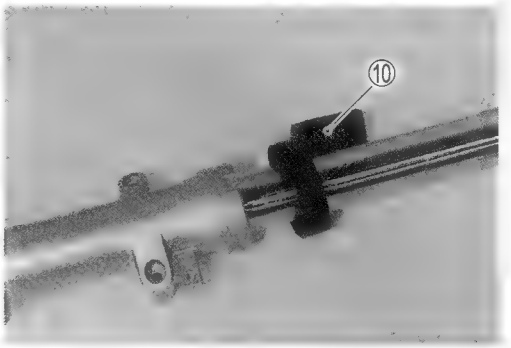

• Remove the oil seal by slowly pulling out the inner tube.

NOTE:
Be careful not to damage the inner tube.

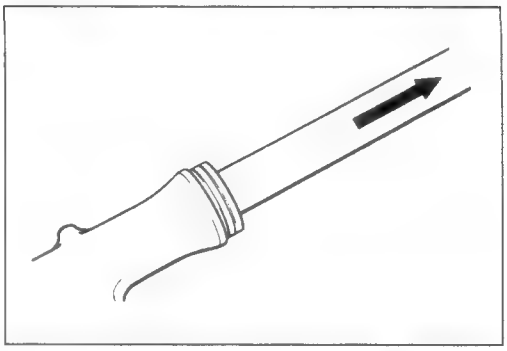

⚠ CAUTION

The outer and inner tube's slide metals must be replaced along with the oil seal and dust seal when assembling the front fork.

• Remove the following parts.

① Oil seal
② Oil seal retainer
③ Outer tube slide metal
④ Inner tube slide metal
⑤ Oil lock piece

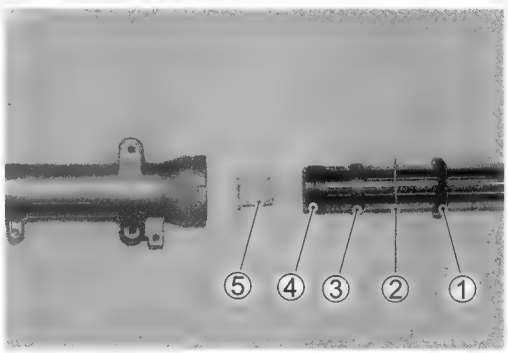

INSPECTION

INNER AND OUTER TUBES

Inspect the inner tube sliding surface and outer tube sliding surface for scuffing.

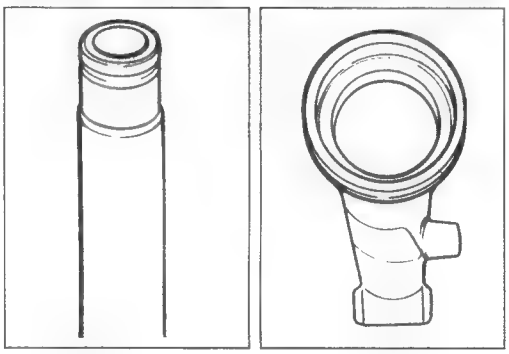

FORK SPRING

Measure the fork spring free length. If it is shorter than the service limit, replace it with a new one.

DATA Front fork spring free length
Service Limit: 356 mm (14.0 in)

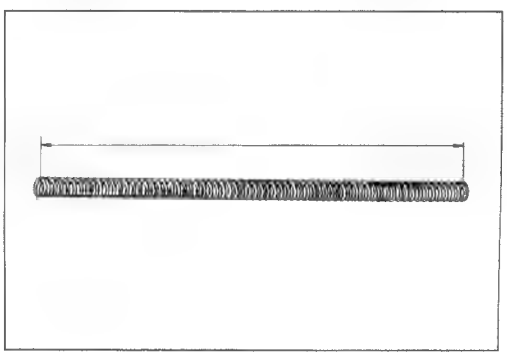

CYLINDER RING

Inspect the cylinder ring for wear or damage. If it is worn or damaged, replace it with a new one.

REASSEMBLY AND REMOUNTING

Reassemble and remount the front fork in the reverse order of removal and disassembly. Pay attention to the following points:

SLIDE METALS AND OIL SEAL

- Hold the inner tube vertically, clean the metal groove and install the inner tube slide metal by hand.

⚠ CAUTION

Do not damage the Teflon coated surface of the inner tube's slide metal when mounting it.

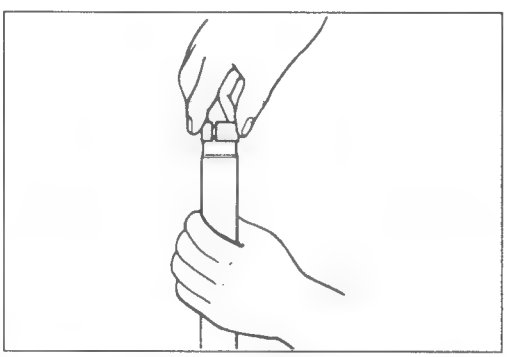

- Install the oil lock piece ①, outer tube slide metal ②, oil seal retainer ③ and oil seal ④ onto the inner tube.

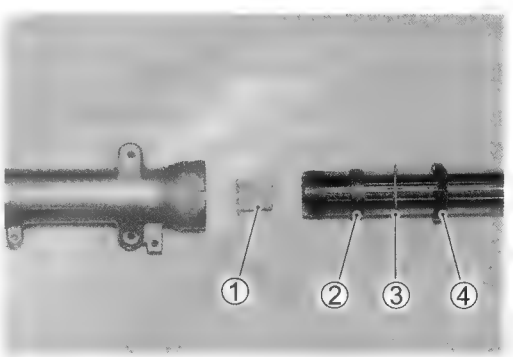

NOTE:

When installing the oil lock piece, insert the tapered end Ⓐ of the oil lock piece into the inner tube ⑤.

Check the installation of the spring ⑥ when reassemble the oil lock piece.

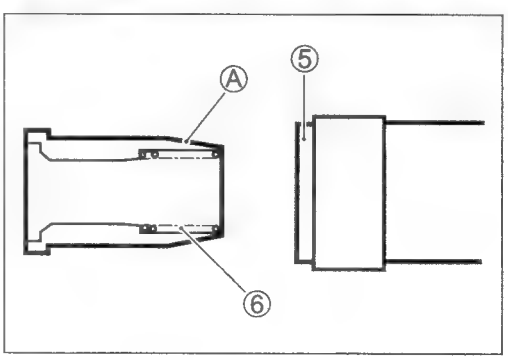

- Insert the inner tube into the outer tube and install the oil seal ⑥ using the special tool.

TOOL 09940-52861: Front fork oil seal installer

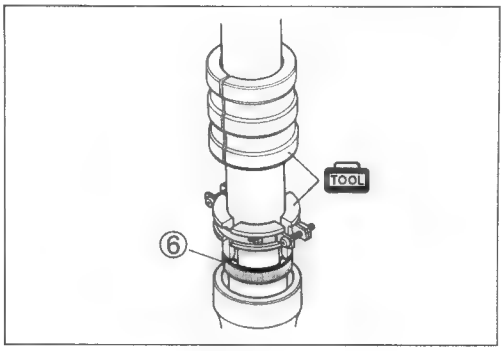

- Install the oil seal stopper ring ⑦.

⚠ CAUTION

Make sure that the oil seal stopper ring is fitted securely.

- Install the dust seal ⑧.

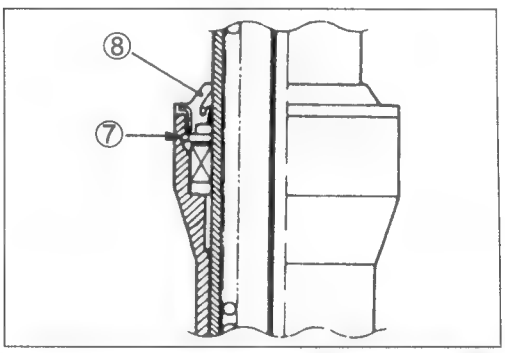

- Install the front fork protecter ⑨.

NOTE:
Fit the projection of the front fork protecter to the depression of the front fork outer tube.

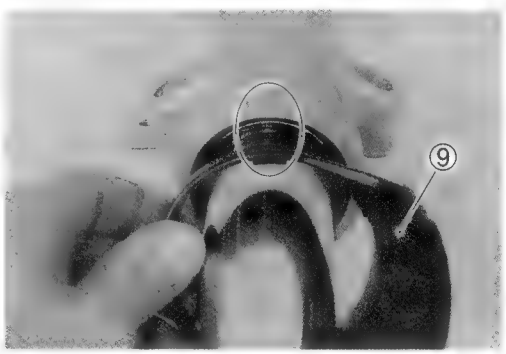

CYLINDER BOLT

- Apply THREAD LOCK "1342" ① to the cylinder bolt and tighten it to the specified torque using a 6-mm hexagon wrench and the special tools.

1342 99000-32050: THREAD LOCK "1342"

TOOL 09940-34520: T-Handle
09940-34531: Attachment (A)

Cylinder bolt: 30 N·m (3.0 kgf·m, 21.5 lb-ft)

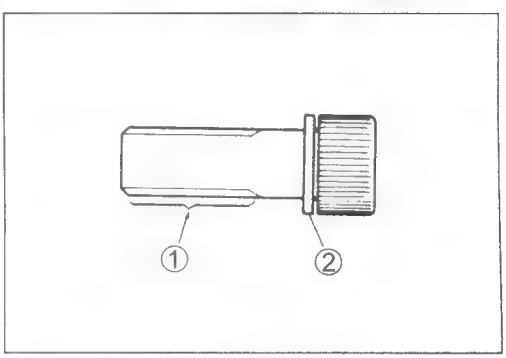

⚠ CAUTION

Use a new damper rod bolt gasket ② to prevent oil leakage.

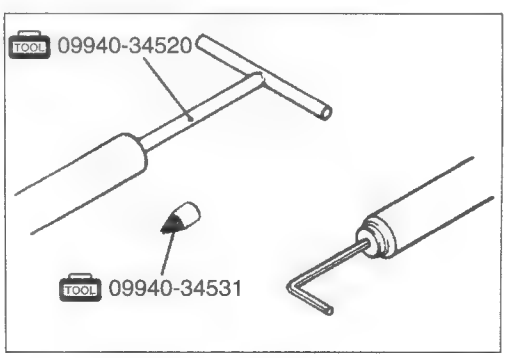

FORK OIL

- Pour the specified fork oil into the inner tube.

Fork oil type: Fork oil #10

FORK 99000-99044-10G: SUZUKI FORK OIL #10

DATA Capacity (each leg):
506 ml (17.1/17.8 US/Imp oz) E-03, 28, 33
510 ml (17.2/18.0 US/Imp oz) ..... The other countries

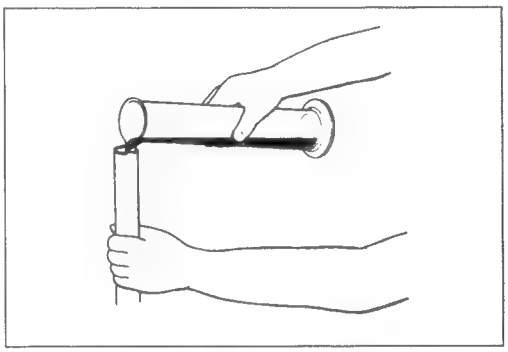

- Hold the front fork in a vertical position and adjust the fork oil level using the special tool.

TOOL 09943-74111: Fork oil level gauge

DATA Oil level: 116 mm (4.6 in) E-03, 28, 33
112 mm (4.4 in) ..... The other countries

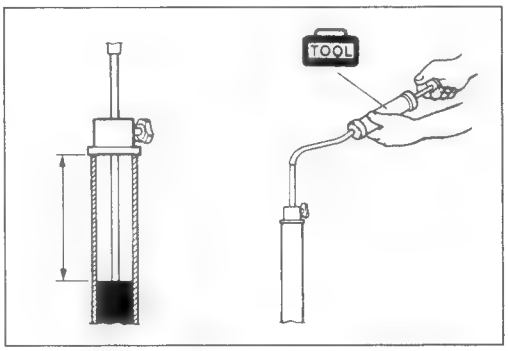

NOTE:
When adjusting the oil level, remove the fork spring and compress the inner tube fully.

FORK SPRING

- Install the fork spring as shown.

NOTE:
The end of the fork spring with the smaller pitch Ⓐ should be at the bottom of the front fork.

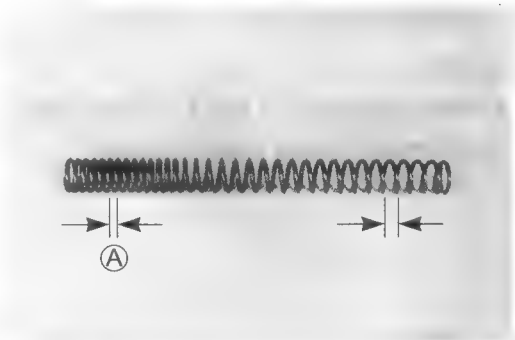

- When remounting the front fork, align the upper surface of the inner tube with the upper surface of the steering stem upper bracket.

- Tighten the front fork lower pinch bolts ①.

Front fork lower pinch bolt ①:
23 N·m (2.3 kgf·m, 16.5 lb-ft)

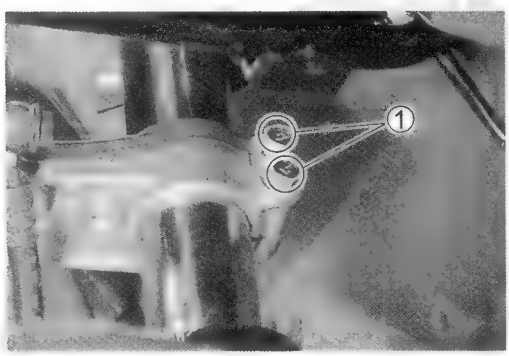

- Tighten the front fork cap bolt ② and front fork upper pinch bolt ③.

Front fork cap bolt ②: 23 N·m (2.3 kgf·m, 16.5 lb-ft)
Front fork upper pinch bolt ③: 23 N·m (2.3 kgf·m, 16.5 lb-ft)

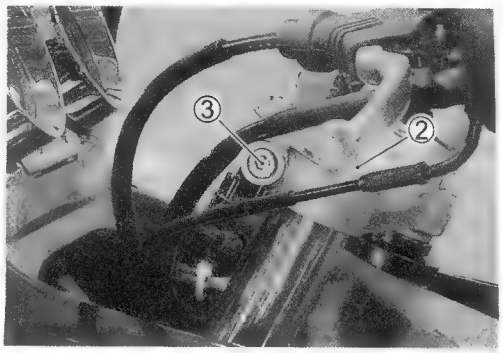

- *Remount the center cowling.(☞5-6)*
- Remount the front fender.
- Install the front wheel. (☞5-11)

NOTE:
Before tightening the front axle and front axle pinch bolt, move the front fork up and down four or five times.

STEERING

CONSTRUCTION

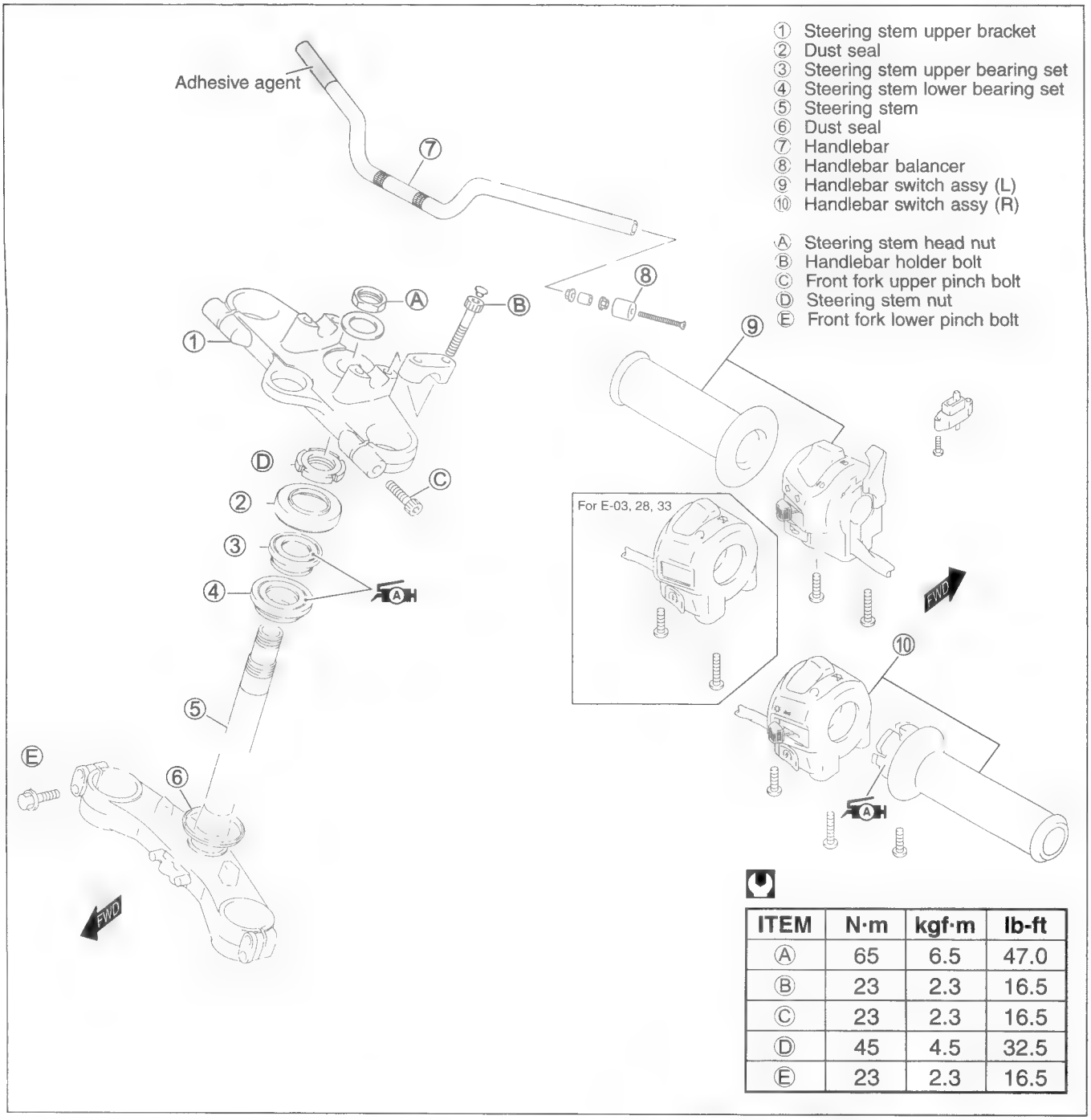

① Steering stem upper bracket
② Dust seal
③ Steering stem upper bearing set
④ Steering stem lower bearing set
⑤ Steering stem
⑥ Dust seal
⑦ Handlebar
⑧ Handlebar balancer
⑨ Handlebar switch assy (L)
⑩ Handlebar switch assy (R)

Ⓐ Steering stem head nut
Ⓑ Handlebar holder bolt
Ⓒ Front fork upper pinch bolt
Ⓓ Steering stem nut
Ⓔ Front fork lower pinch bolt

ITEM	N·m	kgf·m	lb-ft
Ⓐ	65	6.5	47.0
Ⓑ	23	2.3	16.5
Ⓒ	23	2.3	16.5
Ⓓ	45	4.5	32.5
Ⓔ	23	2.3	16.5

REMOVAL AND DISASSEMBLY

- Remove the front wheel. (☞ 5-9)
- Remove the front forks. (☞ 5-13)
- Remove the brake hose joint mounting bolt.

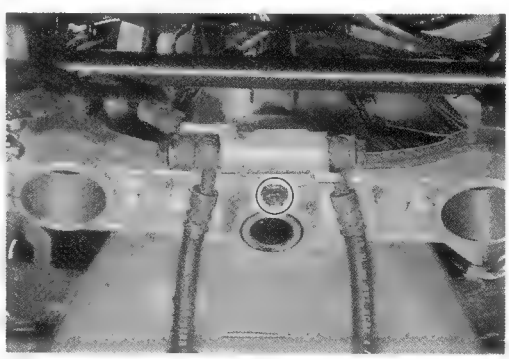

- Remove the handlebars ①.

NOTE:
Place the rag on the fuel tank to prevent the fuel tank scratches.

- Remove the steering stem upper bracket ②.

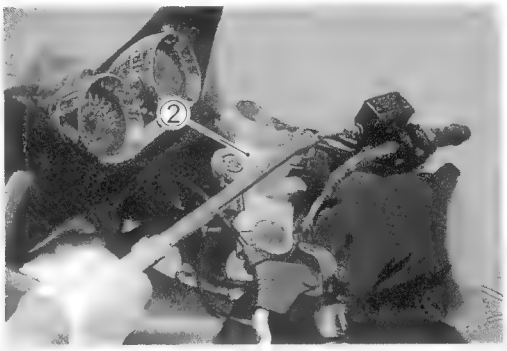

- Remove the steering stem nut using the special tool.

09940-14911: Steering stem nut wrench

- Remove the steering stem lower bracket.

NOTE:
Hold the steering stem lower bracket to prevent it from falling.

- Remove the dust seal ③ and upper bearing inner race ④.

- Remove the steering stem upper bearing ⑤.

• Remove the ignition switch ⑥ using a Torx wrench.

TOOL **09930-11920: Torx bit**
09930-11940: Bit holder

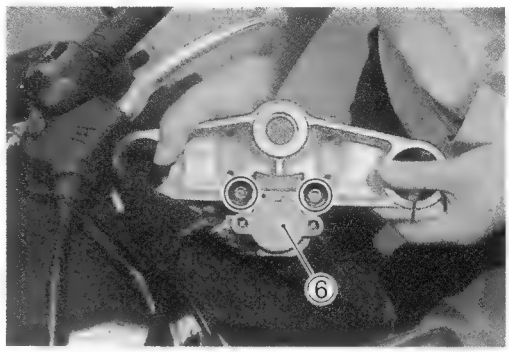

INSPECTION AND DISASSEMBLY

Inspect the removed parts for the following abnormalities.
*Handlebar distortion
*Race wear or damage
*Bearing wear or damage
*Abnormal bearing noise
*Distortion of the steering stem

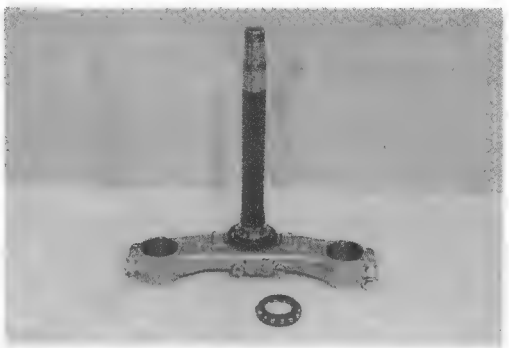

• Remove the steering stem lower bearing inner race using a chisel.

⚠ CAUTION

The removed bearing inner race should be replaced with a new one.

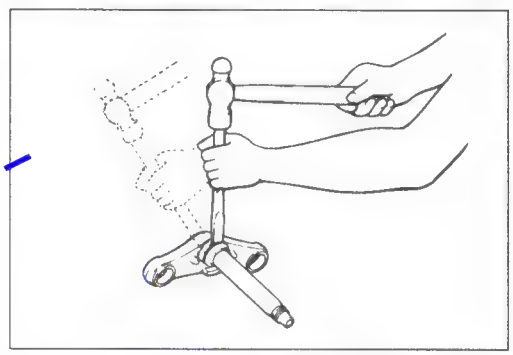

• Remove the steering stem upper and lower bearing races using the special tools.

TOOL **09941-54911: Bearing outer race remover**
09941-74911: Steering bearing installer

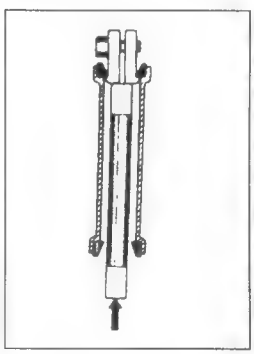

REASSEMBLY AND REMOUNTING

Reassemble and remount the steering stem in the reverse order of removal and disassembly. Pay attention to the following points.

OUTER RACES

• Press in the upper and lower outer races using the special tool.

TOOL **09941-34513: Steering outer race installer**

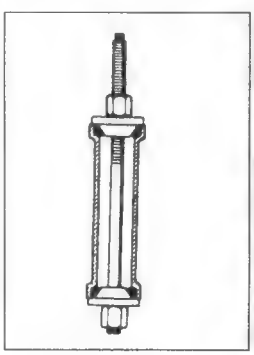

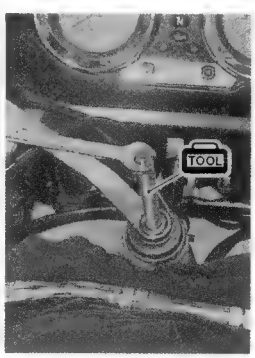

INNER RACE

- Press in the lower inner race using the special tool

TOOL 09941-74911: Steering bearing installer

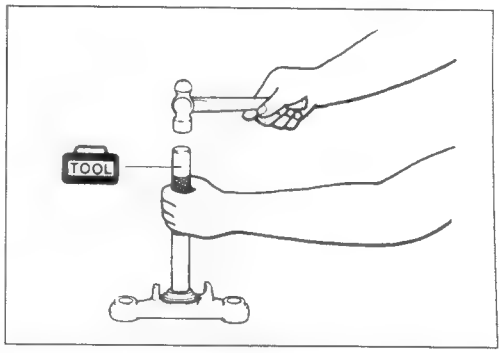

BEARINGS

- Apply SUZUKI SUPER GREASE "A" to the upper and lower bearings and the lip of the dust seals before remounting the steering stem.

For USA

A 99000-25030: SUZUKI SUPER GREASE "A"

For the other countries

A 99000-25010: SUZUKI SUPER GREASE "A"

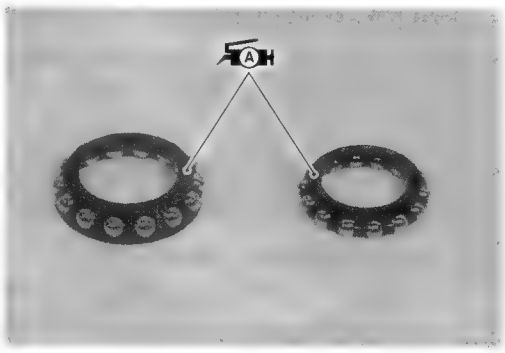

- Install the bearings.

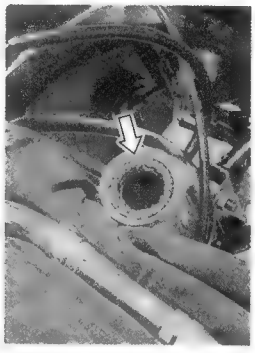

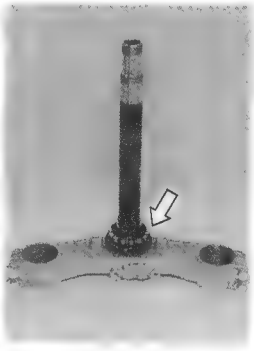

STEERING STEM NUT

- Tighten the steering stem nut to the specified torque using the special tool.

TOOL 09940-14911: Steering stem nut wrench

Stem nut: 45 N·m (4.5 kgf·m, 32.5 lb-ft)

- Turn the steering stem lower bracket about five or six times to the left and right so that the angular ball bearings seat properly.
- Loosen the steering stem nut 1/4-1/2 of a turn Ⓐ.

NOTE:

This adjustment will vary from motorcycle to motorcycle.

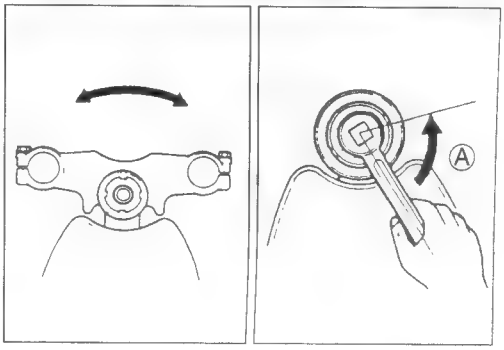

- Tighten the steering stem head nut to the specified torque.

Steering stem head nut: 65 N·m (6.5 kgf·m, 47.0 lb-ft)

NOTE:
Before tightening the steering stem head nut, temporarily install the front forks.

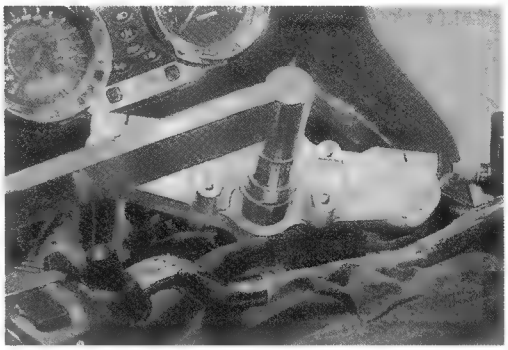

HANDLEBAR AND FRONT FORK

- When remounting the front fork, align the upper surface of the inner tube with the upper surface of the steering stem upper bracket.
- Tighten the front fork lower pinch bolts ① and front fork upper pinch bolt ② to the specified torque.

Front fork lower pinch bolt ①:
23 N·m (2.3 kgf·m, 16.5 lb-ft)
Front fork upper pinch bolt ②:
23 N·m (2.3 kgf·m, 16.5 lb-ft)

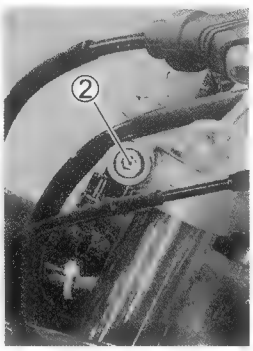

- Set the handlebar to match its punched mark to the mating surface of the handlebar holder.
- Set the punched mark on the handlebar holders as shown in the photograph.
- Tighten the handlebar holder bolts ③.

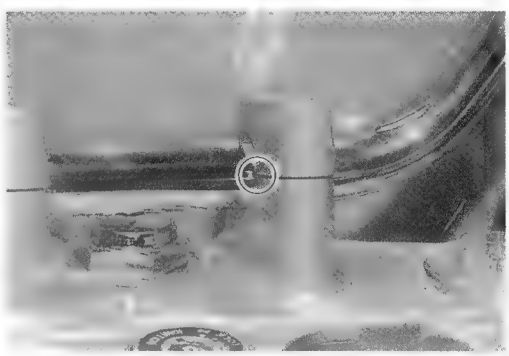

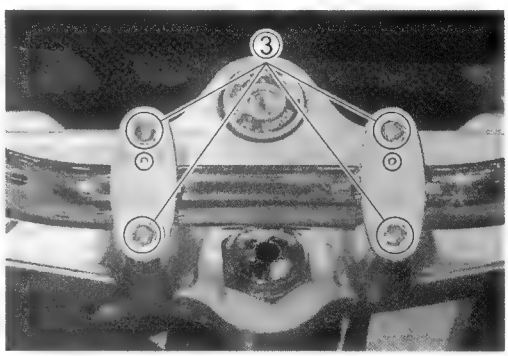

NOTE:
First tighten the handlebar holder bolts Ⓐ to the specified torque.

Handlebar holder bolt: 23 N·m (2.3 kgf·m, 16.5 lb-ft)

- Install the front wheel. (☞ 5-11)

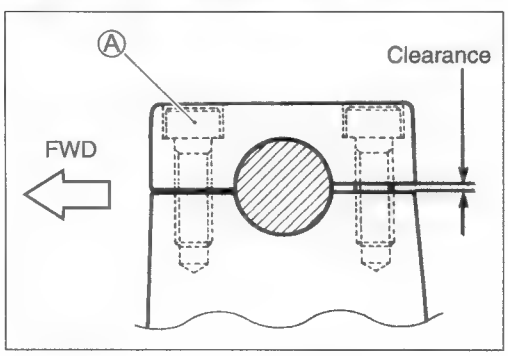

STEERING TENSION ADJUSTMENT

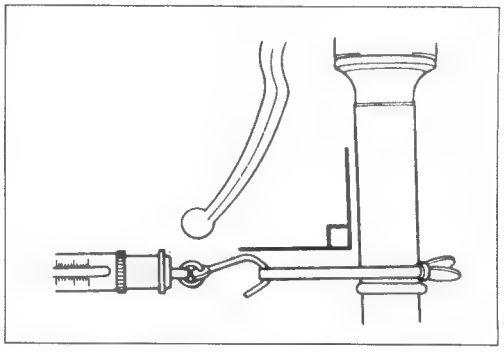

Check the steering tension as follows

- Support the motorcycle using a jack and raise the front wheel off the floor 20 – 30 mm (0.8 – 1.2 in).
- Make sure that the cables and wire harness are properly routed.
- With the front wheel pointing straight ahead, attach the spring scale onto the end of the handlebar as shown.
- When the handlebar starts moving, record the reading on the spring scale. This reading is referred to as the "initial force".
- Repeat the same procedure on the end of the other handlebar.

TOOL 09940-92720: Spring scale

Initial force: 200 – 500 grams

- If the initial force reading is out of specification, adjust the steering tension as follows.

1) First, loosen the front fork upper pinch bolts and the steering stem head nut. Then, adjust the steering stem nut by either loosening or tightening it.
2) Tighten the steering stem head nut and front fork upper pinch bolts to the specified torque and recheck the initial force as described above.
3) Continue adjusting the steering stem nut until the initial force is within specification.

NOTE:
Hold the front fork legs, move them back and forth and make sure that the steering is not loose.

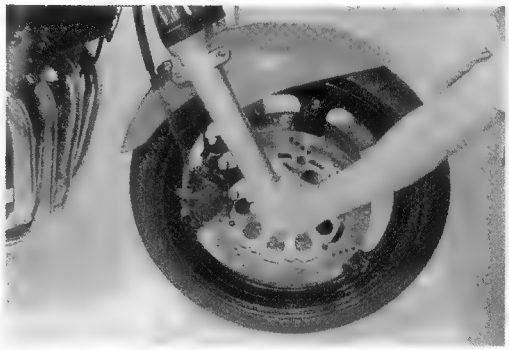

REAR WHEEL

CONSTRUCTION

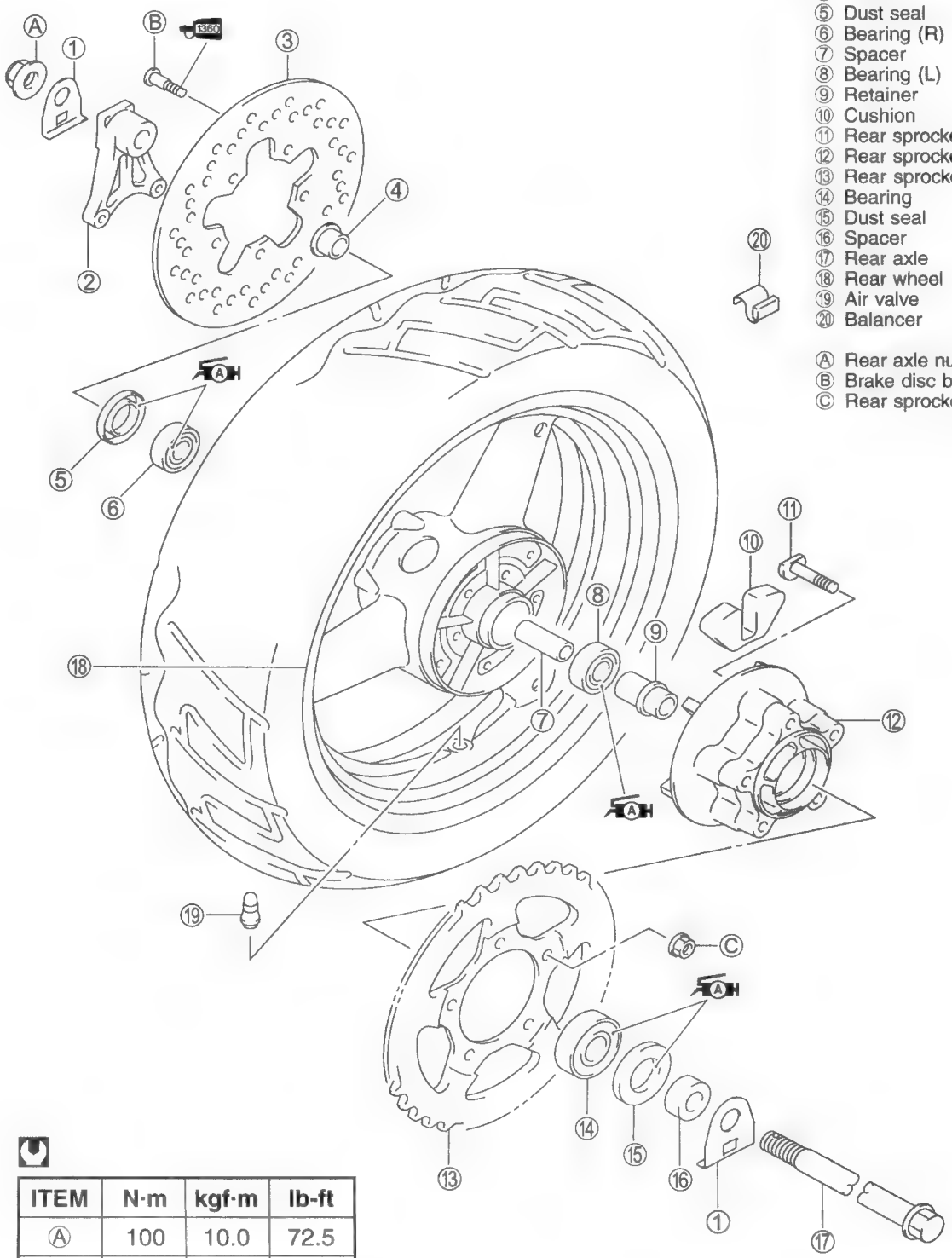

ITEM	N·m	kgf·m	lb-ft
Ⓐ	100	10.0	72.5
Ⓑ	23	2.3	16.5
Ⓒ	50	5.0	36.0

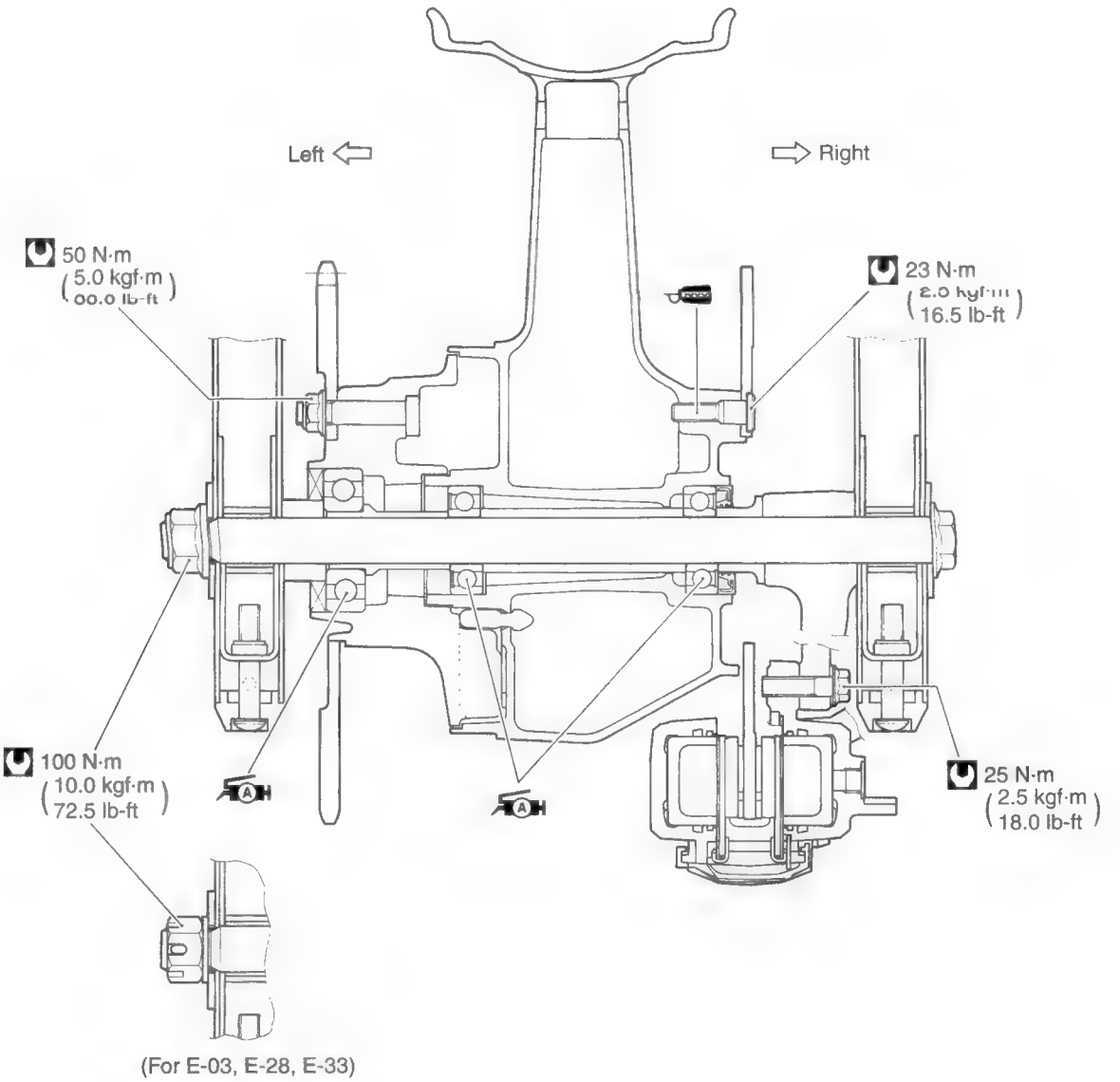

(For E-03, E-28, E-33)

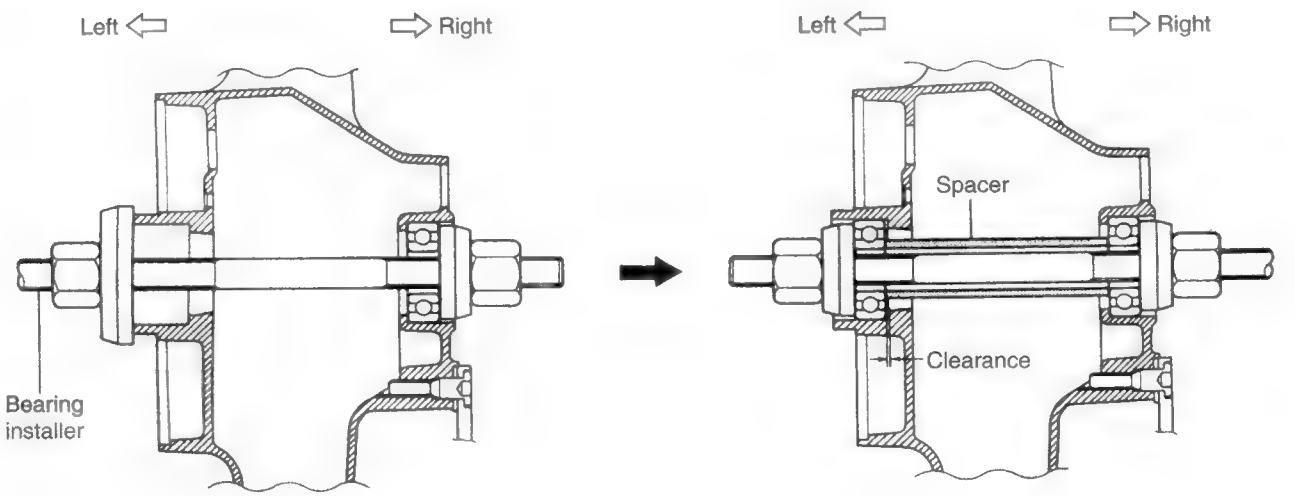

REMOVAL

- Support the motorcycle with center stand.
- Remove the cotter pin ①. (For E-03, 28, 33)
- Loosen the axle nut ②.
- Remove the rear axle nut.

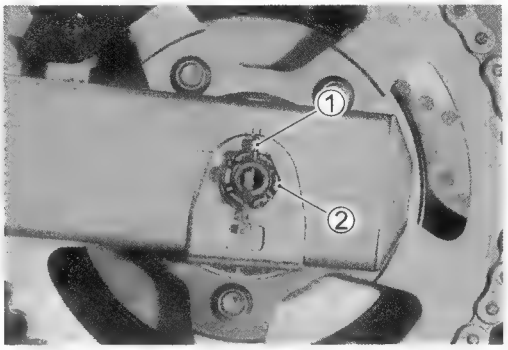

- Remove the rear axle and disengage the drive chain from the rear sprocket.
- Remove the rear wheel.

⚠ CAUTION

Do not operate the brake pedal during or after rear wheel removal.

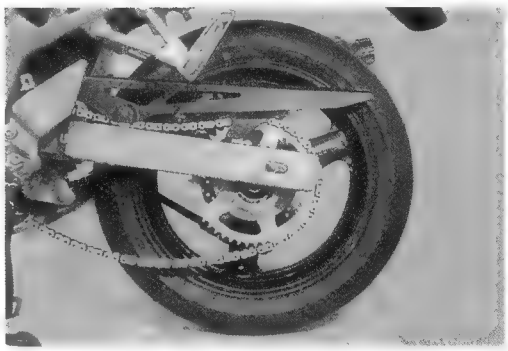

- Draw out the rear sprocket mounting drum from the rear wheel.

NOTE:
Before separating the rear sprocket mounting drum, slightly loosen the rear sprocket nuts.

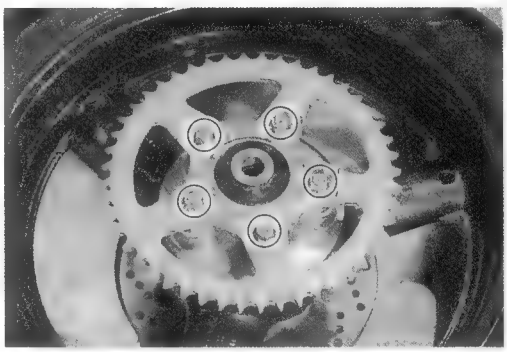

- Remove the rear sprocket ③ from the rear sprocket mounting drum.
- Remove the spacer ④.

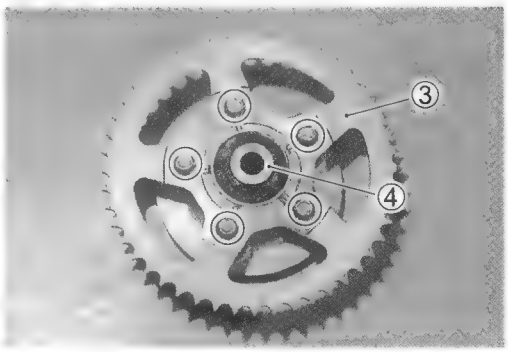

- Remove the retainer ⑤.

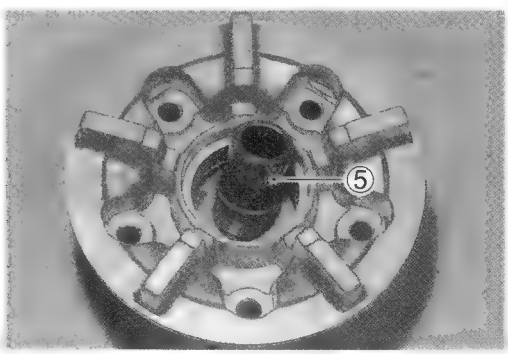

INSPECTION AND DISASSEMBLY

TIRE ..... (☞ 5-58)
REAR WHEEL ..... (☞ 5-9)
WHEEL BEARING ..... (☞ 5-9)
(Use the front wheel specifications and procedure.)

REAR SPROCKET MOUNTING DRUM BEARING

Inspect the play of the bearing by hand while it is in the rear sprocket mounting drum.
Rotate the inner race by hand to inspect it for abnormal noise and smooth rotation. Replace the bearing if there is anything unusual.

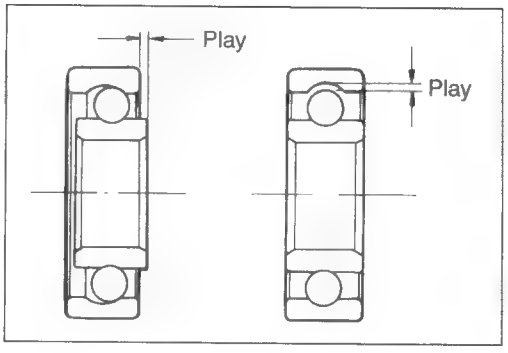

- Remove the rear sprocket mounting drum dust seal using the special tool.

TOOL **09913-50121: Oil seal remover**

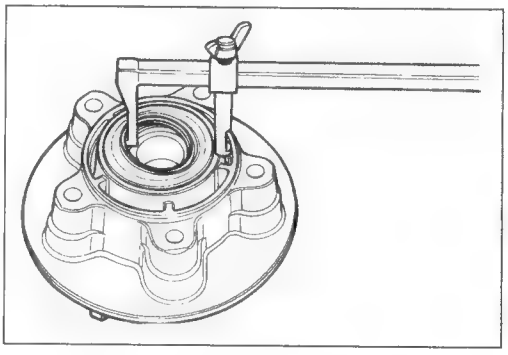

- Remove the bearings using the special tool.

TOOL **09921-20220: Bearing remover set**

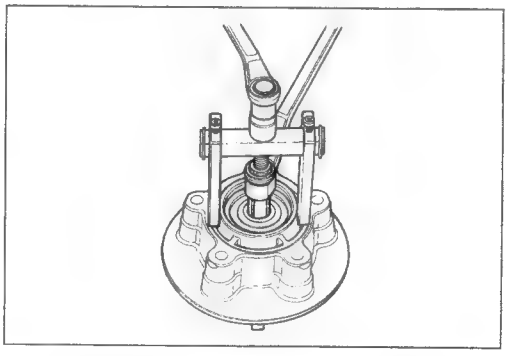

⚠ CAUTION

The removed dust seal and bearing must be replaced with new ones.

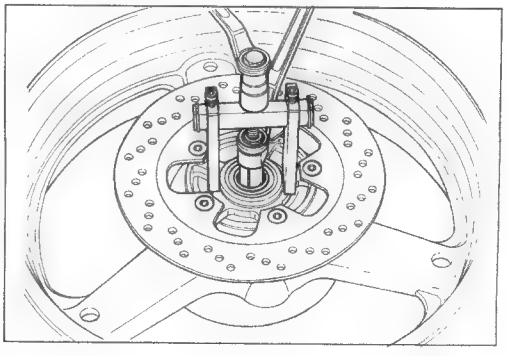

REAR AXLE

Measure the rear axle runout using the dial gauge. If the runout exceeds the service limit, replace the rear axle.

09900-20606: Dial gauge (1/100 mm)
09900-20701: Magnetic stand
09900-21304: V-block set (100 mm)

Wheel axle runout
Service Limit: 0.25 mm (0.01 in)

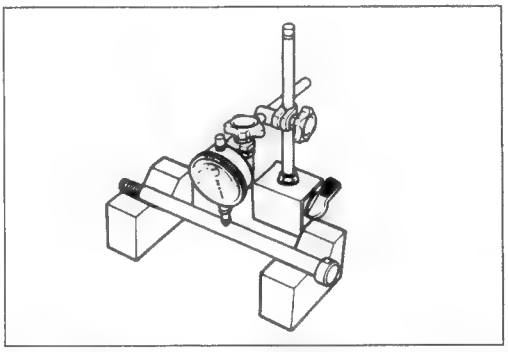

CUSHION

Inspect the cushions for wear and damage.
Replace the cushions if there is anything unusual.

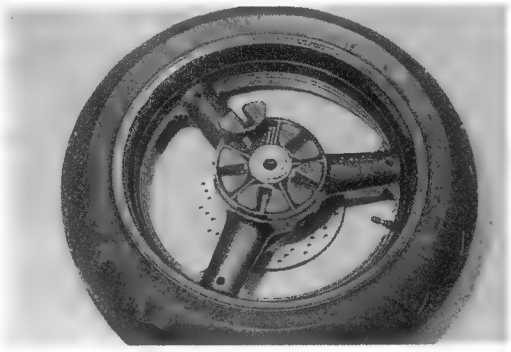

REAR SPROCKET

Inspect the rear sprocket's teeth for wear. If they are worn, replace the sprockets and drive chain as a set.

A Normal wear
B Excessive wear

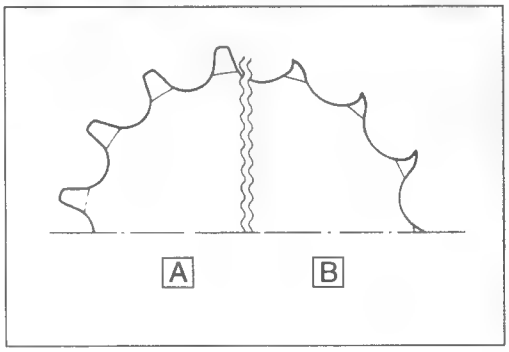

REASSEMBLY

WHEEL BEARINGS

- Apply SUZUKI SUPER GREASE "A" to the bearings before installation.

For USA
99000-25030: SUZUKI SUPER GREASE "A"
For the other countries
99000-25010: SUZUKI SUPER GREASE "A"

- Install the wheel bearings using the special tool.

09941-34513: Bearing installer set

⚠ CAUTION

First, install the right wheel bearing, then install the left wheel bearing.
The sealed cover on the bearing must face out.
(☞ 5-27)

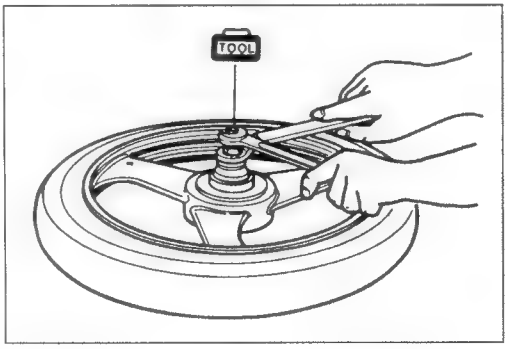

REAR SPROCKET MOUNTING DRUM BEARING AND DUST SEAL

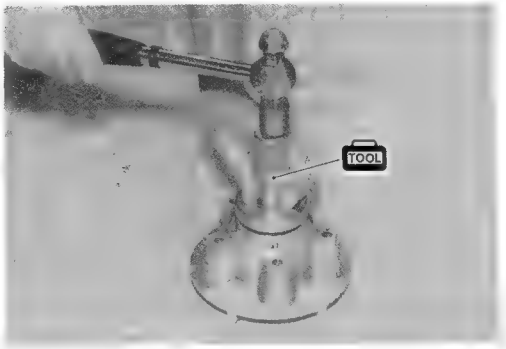

- Install the new bearing and new dust seal using the special tool.

TOOL 09913-75520: Bearing installer

NOTE:
Apply SUZUKI SUPER GREASE "A" to the bearing and dust seal lip before assembling the rear sprocket mounting drum.

For USA
A 99000-25030: SUZUKI SUPER GREASE "A"

For the other countries
A 99000-25010: SUZUKI SUPER GREASE "A"

REMOUNTING

Remount the rear wheel in the reverse order of removal.
Pay attention to the following points:

- Make sure that the brake disc is clean and free of any grease. Apply THREAD LOCK SUPER "1360" to the brake disc bolts and tighten them to the specified torque.

1360 99000-32130: THREAD LOCK SUPER "1360"

Brake disc bolt: 23 N·m (2.3 kgf·m, 16.5 lb-ft)

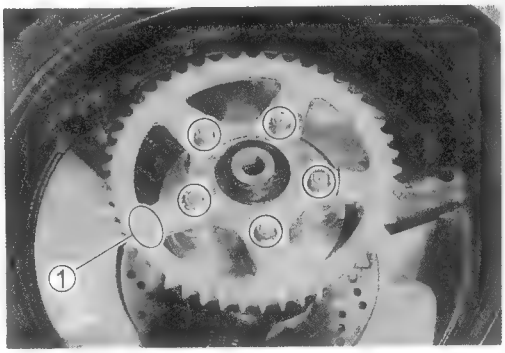

- Tighten the rear sprocket nuts to the specified torque.

Rear sprocket nut: 50 N·m (5.0 kgf·m, 36.0 lb-ft)

NOTE:
The stamped mark ① on the rear sprocket should face to the outside.

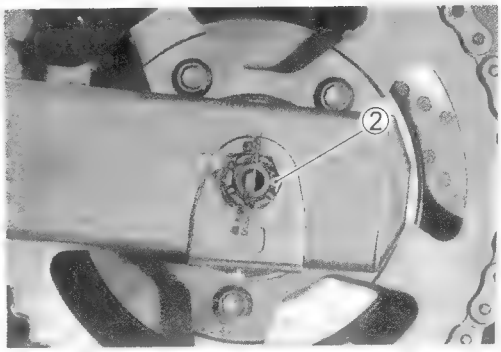

- Adjust the drive chain slack after installing the rear wheel. (☞ 2-14)
- Tighten the rear axle nut ② to the specified torque.

Rear axle nut: 100 N·m (10.0 kgf·m, 72.5 lb-ft)

- Install a new cotter pin. (For E-03, 28, 33)
- Tighten both chain adjuster nuts securely.
- After remounting the rear wheel, pump the brake pedal a few times to check for proper brake operation.

REAR SUSPENSION

CONSTRUCTION

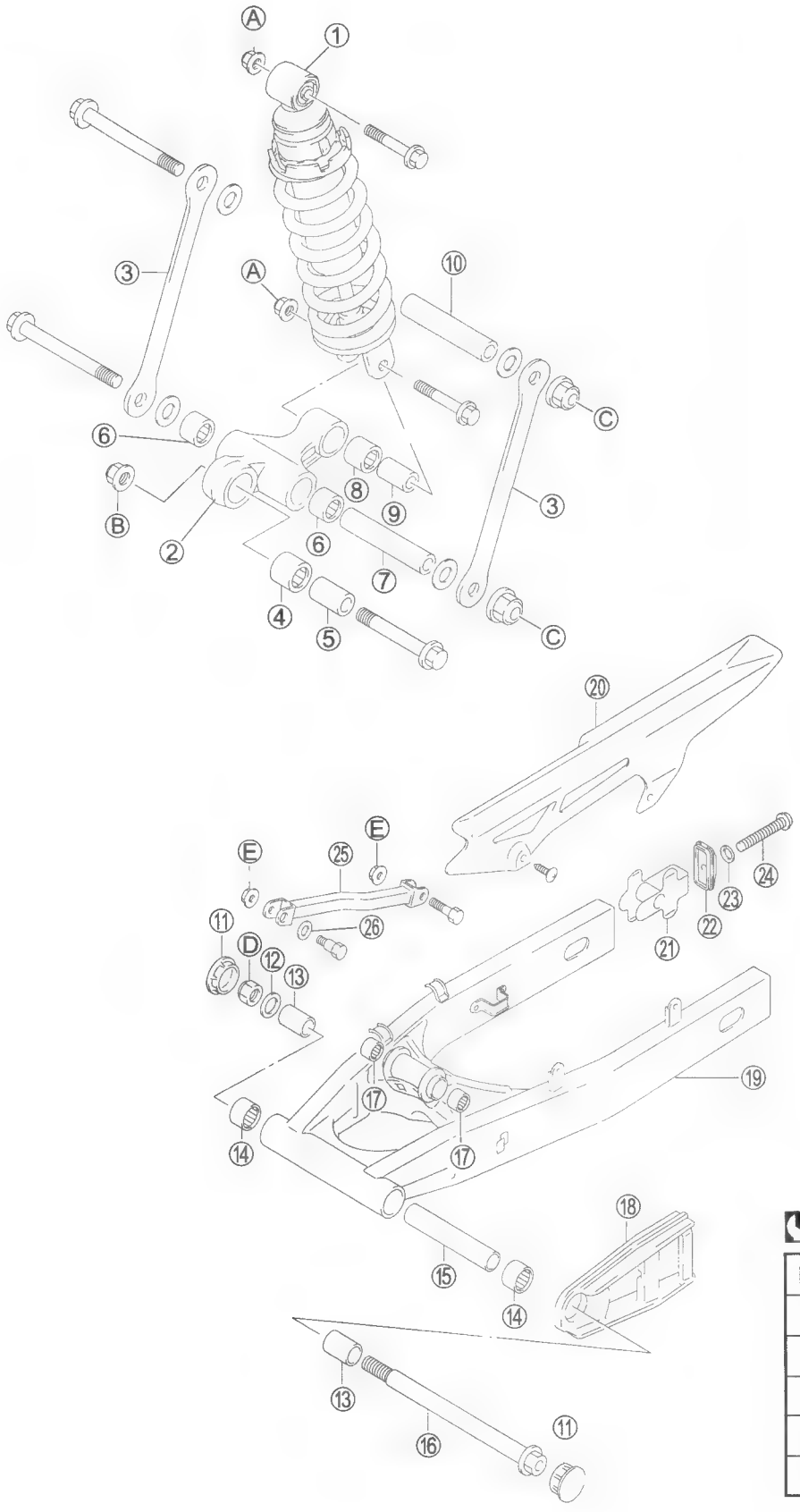

① Rear shock absorber
② Rear cushion lever
③ Rear cushion lever rod
④ Bearing
⑤ Spacer
⑥ Bearing
⑦ Spacer
⑧ Bearing
⑨ Spacer
⑩ Spacer
⑪ Pivot shaft end cap
⑫ Washer
⑬ Spacer
⑭ Bearing
⑮ Spacer
⑯ Pivot shaft
⑰ Bearing
⑱ Chain buffer
⑲ Swingarm
⑳ Chain case
㉑ Chain adjuster
㉒ Chain adjuster guide
㉓ Washer
㉔ Chain adjuster bolt
㉕ Torque link
㉖ Washer

Ⓐ Rear shock absorber mounting nut
Ⓑ Cushion lever mounting nut
Ⓒ Cushion lever rod mounting nut
Ⓓ Swingarm pivot nut
Ⓔ Rear torque link nut

ITEM	N·m	kgf·m	lb-ft
Ⓐ	50	5.0	36.0
Ⓑ	78	7.8	56.5
Ⓒ	78	7.8	56.5
Ⓓ	100	10.0	72.5
Ⓔ	35	3.5	25.5

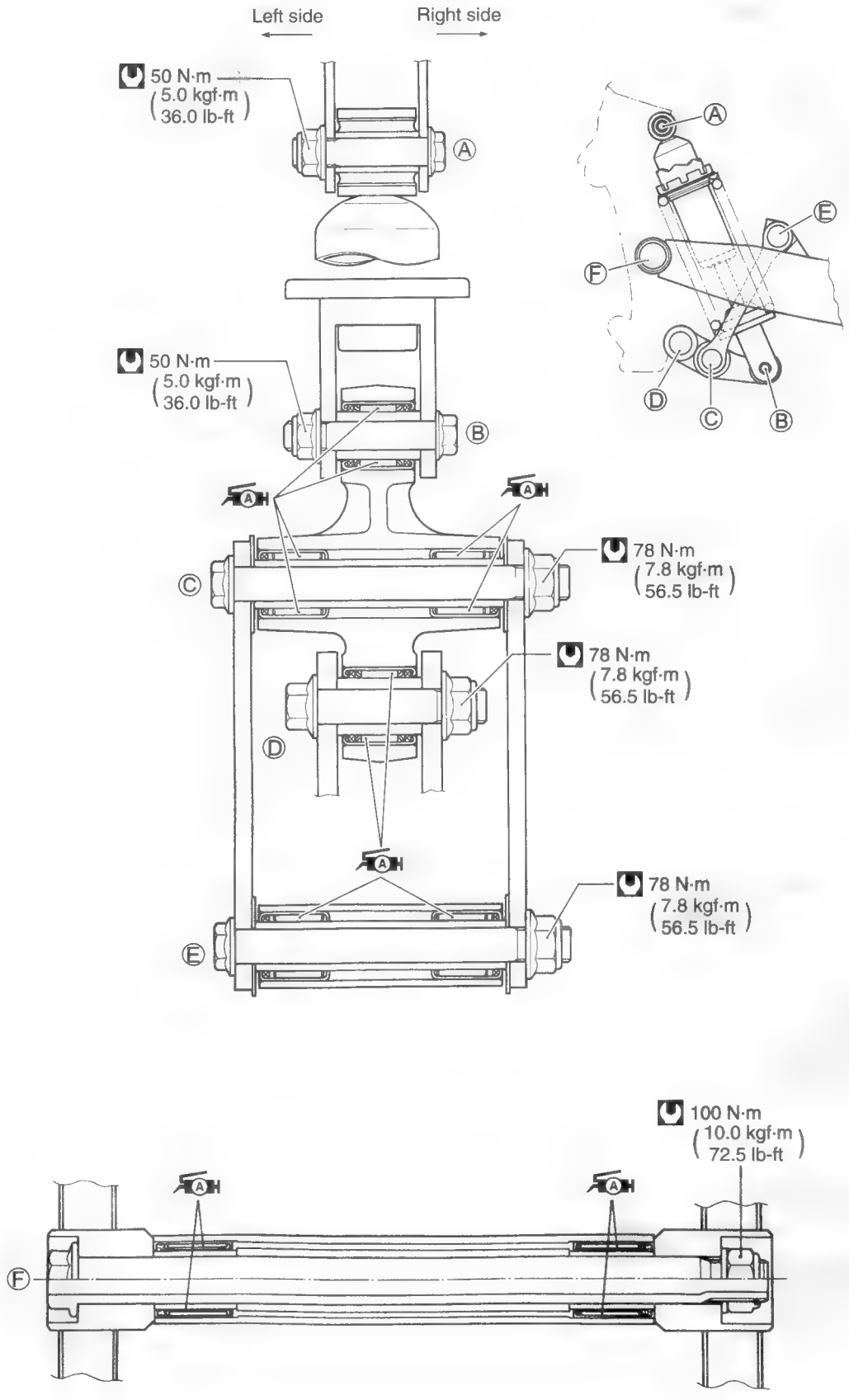
Left side
Right side
50 N·m
(5.0 kgf·m
36.0 lb-ft)
A
50 N·m
(5.0 kgf·m
36.0 lb-ft)
B
78 N·m
(7.8 kgf·m
56.5 lb-ft)
C
78 N·m
(7.8 kgf·m
56.5 lb-ft)
D
78 N·m
(7.8 kgf·m
56.5 lb-ft)
E
A
E
F
D
C
B
100 N·m
(10.0 kgf·m
72.5 lb-ft)
F

REMOVAL

- Remove the rear wheel. (☞ 5-28)
- Remove the drive chain case ①.

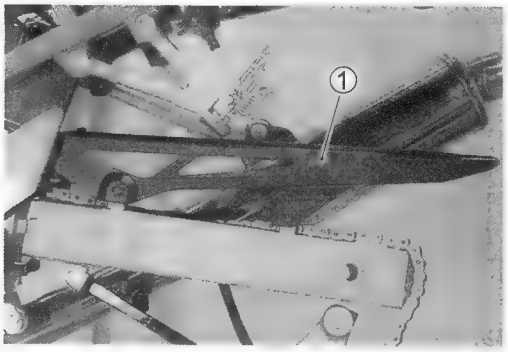

- Remove the rear torque link nut ②.

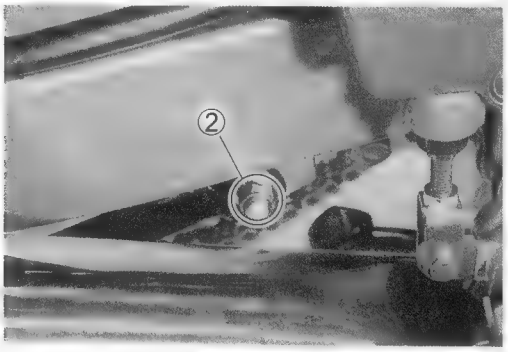

- Remove the brake hose union bolt ③.
- Remove the brake hose from the brake hose guide and hose clamps.

⚠ CAUTION

Handle brake fluid with care: the fluid reacts chemically with paint, plastics, rubber materials etc.

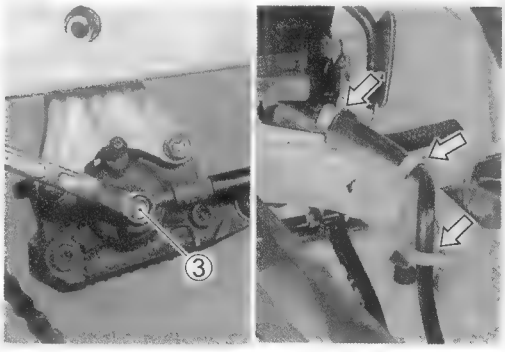

- Remove side frame cover (left side only). (☞ 5-6)
- Remove the rear shock absorber upper mounting bolt and nut ④.

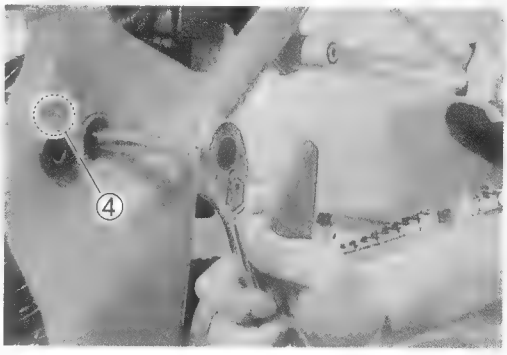

- Remove the cushion lever mounting bolt and nut ⑤.

NOTE:
Slightly loosen the cushion lever rod mounting nuts and rear shock absorber lower mounting nut to facilitate later disassembly.

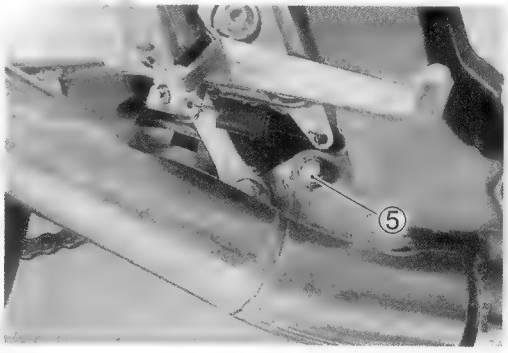

- Remove the right and left pivot shaft end caps ⑥.
- Remove the swingarm by removing the pivot shaft nut and pivot shaft.

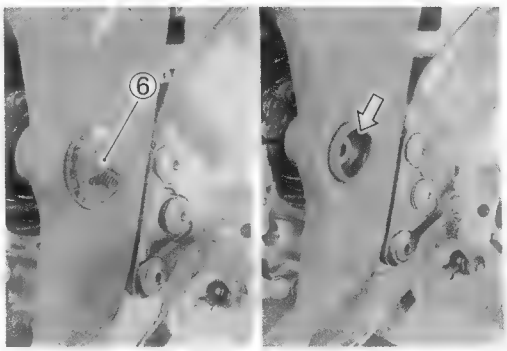

- Remove the rear shock absorber ⑦, cushion lever ⑧, cushion lever rods ⑨.

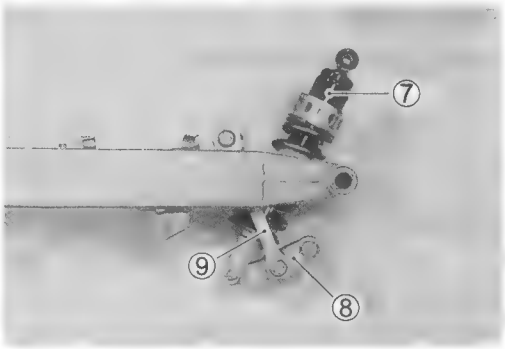

INSPECTION AND DISASSEMBLY

DUST SEALS AND SPACERS

- Remove the dust seals, washers and spacers from the swingarm and cushion lever.
- Inspect the spacers for any flaws or other damage. If any defects are found, replace the spacers with new ones.

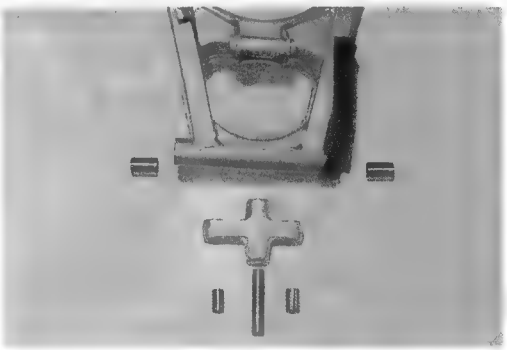

CHAIN BUFFER

- Remove the chain buffer ①.
- Inspect the chain buffer for wear and damage. If any defects are found, replace the chain buffer with a new one.

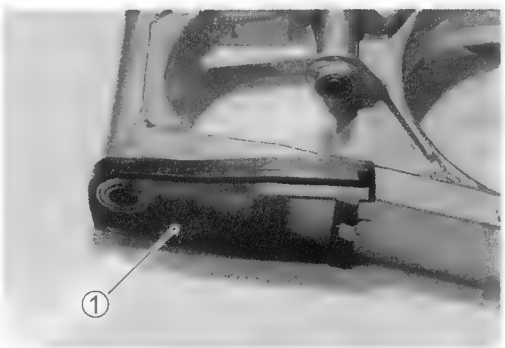

SWINGARM NEEDLE BEARINGS

Insert the spacers into the needle bearings, move the spacer up and down and check for any play.
If there is excessive play, replace the bearing(-s) with a new one.

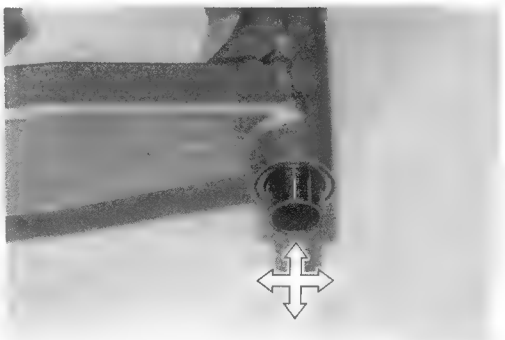

- Remove the swingarm needle bearings and spacer using the special tools.

09923-74510: Bearing remover
09930-30102: Sliding shaft

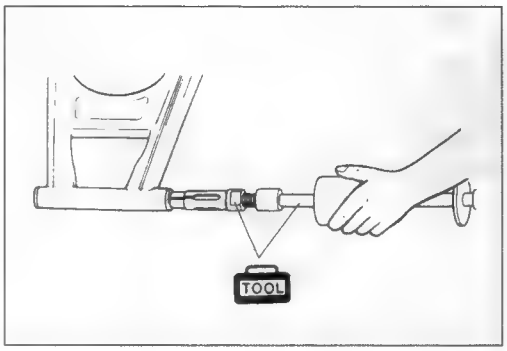

⚠ CAUTION

The removed needle bearings should be replaced with new ones.

SWINGARM

Inspect the swingarm for damage.

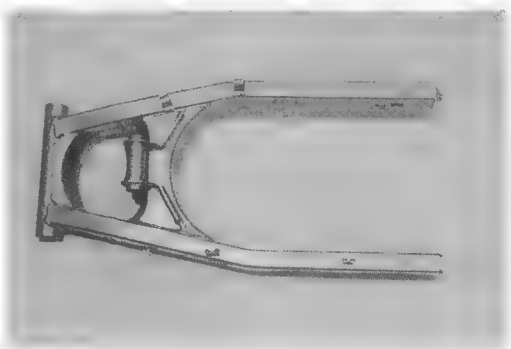

CUSHION LEVER NEEDLE BEARINGS

Insert the spacers into the needle bearings, move the spacer up and down and check for any play.
If there is excessive play, replace the bearing(-s) with a new one.

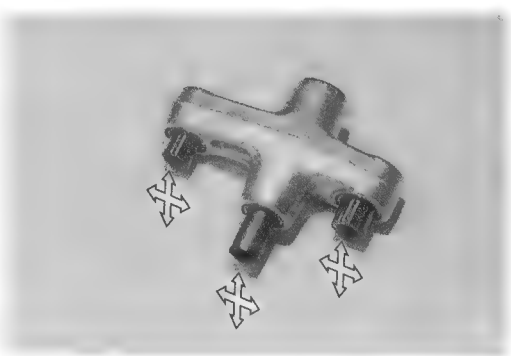

- Remove the cushion lever needle bearings using the special tools.

09923-73210: Bearing remover
09930-30102: Sliding shaft
09925-98221: Bearing remover
09943-88211: Bearing remover

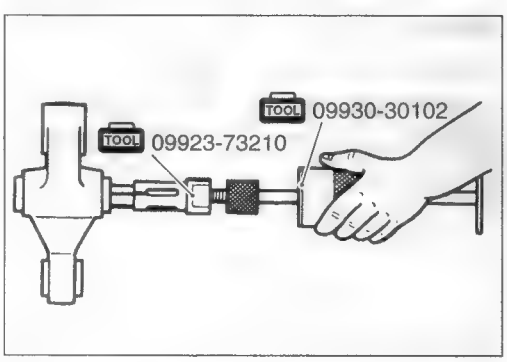

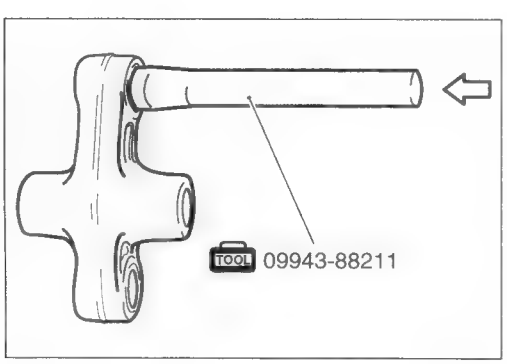

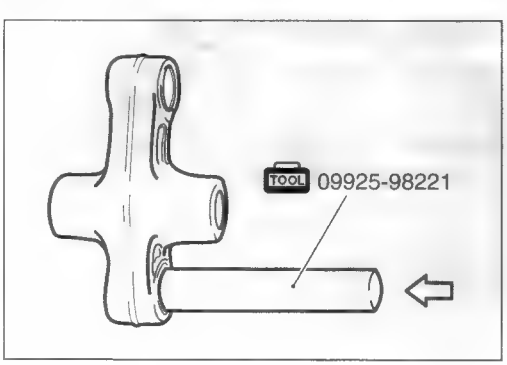

CUSHION LEVER AND CUSHION LEVER RODS

Inspect the cushion lever and cushion lever rods for damage.

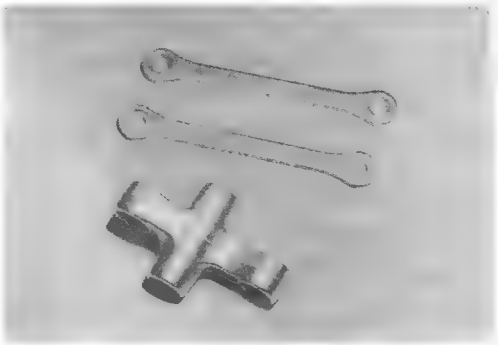

PIVOT SHAFT

Measure the pivot shaft runout using the dial gauge. If the runout exceeds the service limit, replace the pivot shaft.

09900-20606: Dial gauge (1/100 mm)
09900-20701: Magnetic stand
09900-21304: V-block set (100 mm)

Swingarm pivot shaft runout
Service Limit: 0.3 mm (0.01 in)

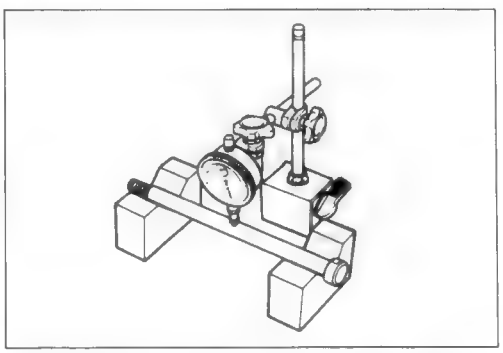

REAR SHOCK ABSORBER

Inspect the rear shock absorber for damage and oil leakage. If any defects are found, replace the rear shock absorber with a new one.

⚠ CAUTION

Do not attempt to disassemble the rear shock absorber. It is unserviceable.

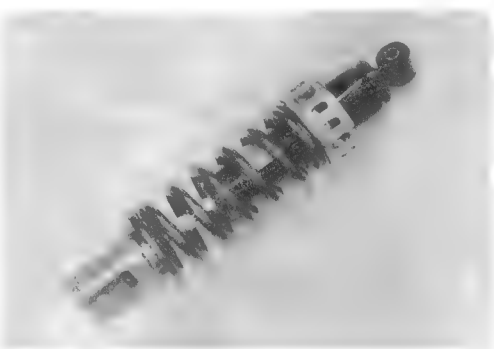

REASSEMBLY

SWINGARM NEEDLE BEARINGS

- Before installing the needle bearings, install the spacer.
- Press the needle bearings into the swingarm pivot using the special tool.

09941-34513: Steering outer race installer

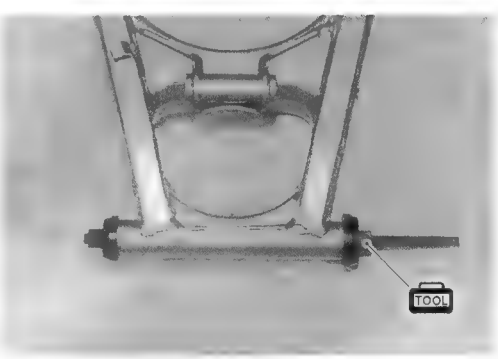

NOTE:
Install the needle bearings with the stamped mark facing out.

- Apply SUZUKI SUPER GREASE "A" to the spacers, dust seals and needle bearings.

For USA
99000-25030: SUZUKI SUPER GREASE "A"
For the other countries
99000-25010: SUZUKI SUPER GREASE "A"

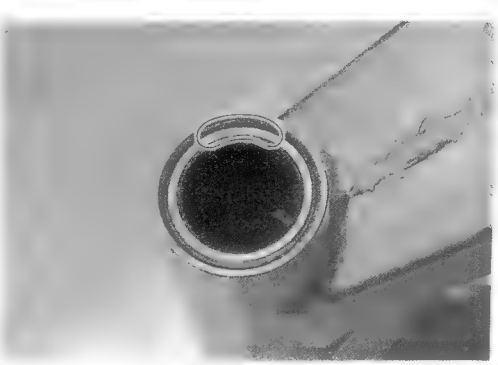

CUSHION LEVER NEEDLE BEARINGS

- Press the needle bearings into the cushion lever using the special tool.

TOOL 09941-34513: Steering outer race installer

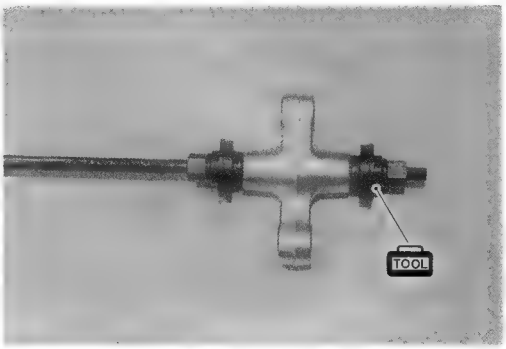

- Apply SUZUKI SUPER GREASE "A" to the spacers and needle bearings.

For USA

A 99000-25030: SUZUKI SUPER GREASE "A"

For the other countries

A 99000-25010: SUZUKI SUPER GREASE "A"

REAR SHOCK ABSORBER DISPOSAL

⚠ WARNING

The rear shock unit contains high-pressure nitrogen gas. Mishandling can cause explosion.

- *** Keep away from fire and heat. High gas pressure caused by heat can cause an explosion.**
- *** Release gas pressure before disposing.**

GAS PRESSURE RELEASE

- Mark the drill hole with a center punch.

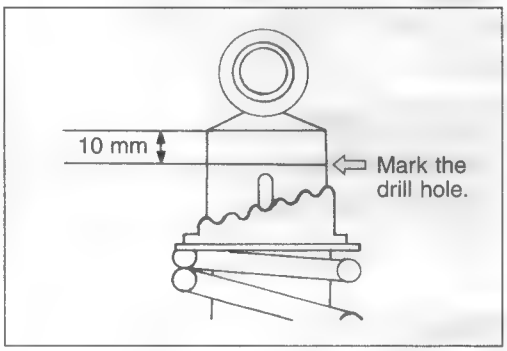

- Cover the rear shock absorber with a transparent vinyl bag ①.
- Hold the rear shock absorber ② with a vice.
- Mark a hole with a 3 mm drill.

⚠ WARNING

Wear eye protection to protect your eyes from released gas and metal chips.

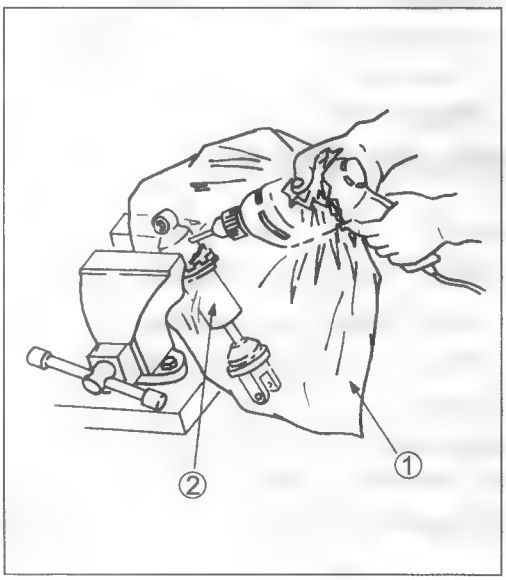

REMOUNTING

Remount the swingarm and rear shock absorber in the reverse order of removal. Pay attention to the following points:

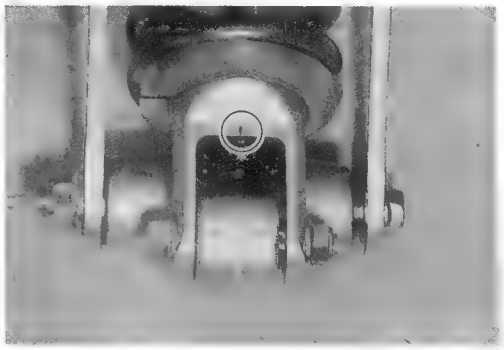

- When remount the rear shock absorber and cushion lever, set the index line rearward.

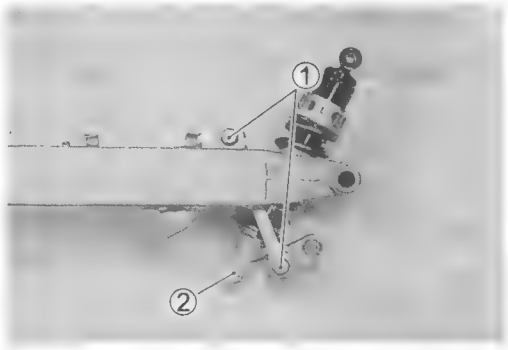

- Tighten the cushion lever rod mounting nuts ① and rear shock absorber lower mounting nut ② to the specified torque.

Cushion lever rod mounting nut ①:
78 N·m (7.8 kgf·m, 56.5 lb-ft)
Rear shock absorber lower mounting nut ②:
50 N·m (5.0 kgf·m, 36.0 lb-ft)

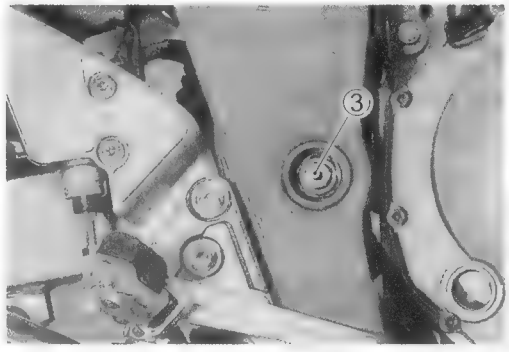

- Tighten the pivot shaft nut ③ to the specified torque.

Pivot shaft nut: 100 N·m (10.0 kgf·m, 72.5 lb-ft)

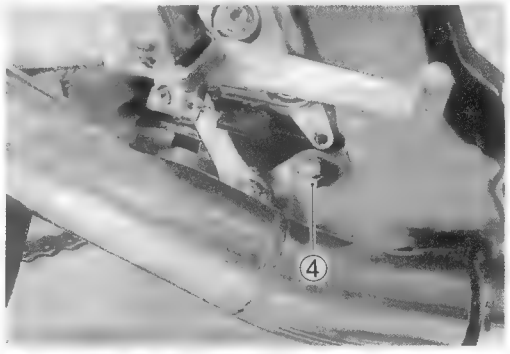

- Tighten the cushion lever mounting nut ④ to the specified torque.

Cushion lever mounting nut: 78 N·m (7.8 kgf·m, 56.5 lb-ft)

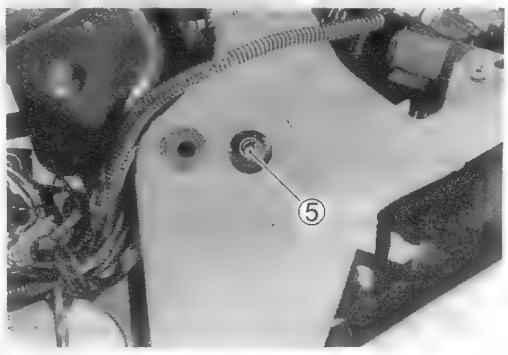

- Tighten the rear shock absorber upper mounting nut ⑤ to the specified torque.

Rear shock absorber upper mounting nut:
50 N·m (5.0 kgf·m, 36.0 lb-ft)

• Tighten the brake hose union bolt ⑥ to the specified torque.

Brake hose union bolt: 23 N·m (2.3 kgf·m, 16.5 lb-ft)

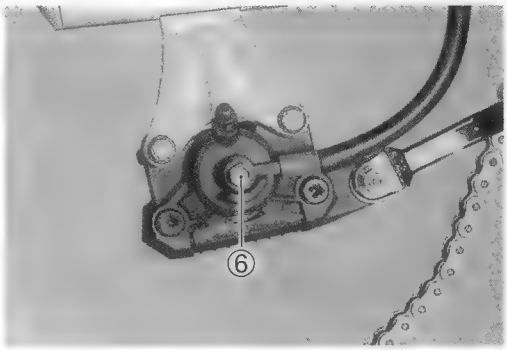

• Tighten the rear torque link nut ⑦ to the specified torque.

Rear torque link nut: 35 N·m (3.5 kgf·m, 25.5 lb-ft)

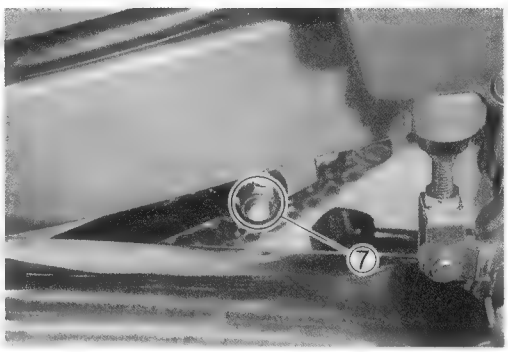

REAR WHEEL

(☞ 5-31)

REAR BRAKE

Bleed air from the brake system after remounting the brake caliper. (☞ 2-18)

FINAL INSPECTION AND ADJUSTMENT

After installing the rear suspension and rear wheel, adjust the following before riding.

* Drive chain ..... (☞ 2-14)
* Tire pressure ..... (☞ 2-20)

SUSPENSION SETTING

After installing the rear suspension, adjust the spring pre-load and damping force as follows.

Spring pre-load adjuster ①	Rebound damping force adjuster ②
4th	2nd

FRONT BRAKE

CONSTRUCTION

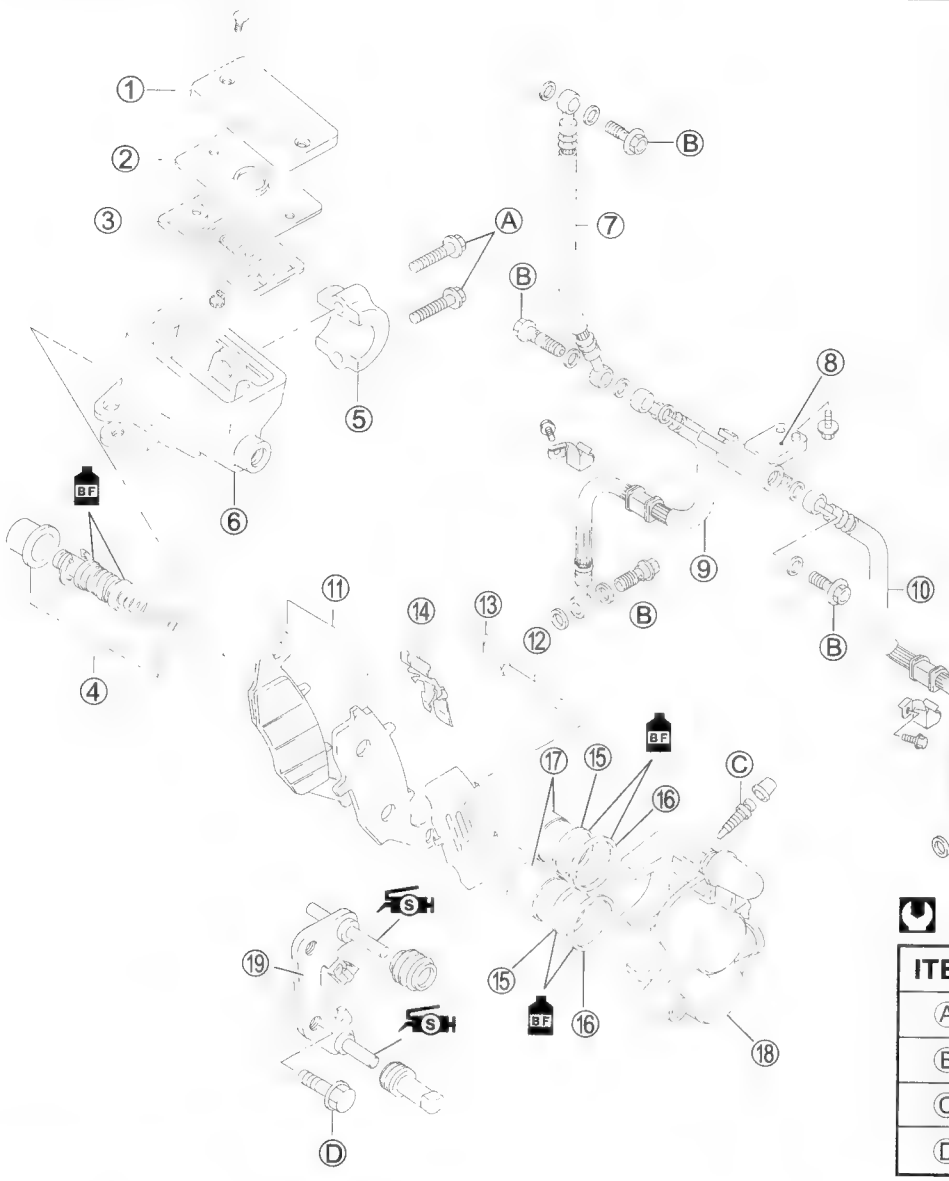

① Master cylinder reservoir cap
② Reservoir cap plate
③ Diaphragm
④ Piston/cup set
⑤ Master cylinder holder
⑥ Master cylinder
⑦ Brake hose #1
⑧ Brake hose joint
⑨ Brake hose # 2 (R)
⑩ Brake hose # 2 (L)
⑪ Brake pads
⑫ Brake pad mounting pin
⑬ Clip
⑭ Spring
⑮ Dust seal
⑯ Piston seal
⑰ Brake caliper pistons
⑱ Brake caliper
⑲ Brake caliper holder

Ⓐ Master cylinder holder bolt
Ⓑ Brake hose union bolt
Ⓒ Air bleeder valve
Ⓓ Brake caliper mounting bolt

ITEM	N·m	kgf·m	lb-ft
Ⓐ	10	1.0	7.0
Ⓑ	23	2.3	16.5
Ⓒ	8	0.8	6.0
Ⓓ	39	3.9	28.0

⚠ WARNING

* **This brake system is filled with an ethylene glycol-based DOT 4 brake fluid. Do not use or mix different types of fluid, such as silicone-based or petroleum-based brake fluids.**
* **Do not use any brake fluid taken from old, used or unsealed containers. Never reuse brake fluid left over from the last servicing or which has been stored for long periods of time.**
* **When storing brake fluid, seal the container completely and keep it away from children.**
* **When replenishing brake fluid, take care not to get dust into the fluid.**
* **When washing brake components, use new brake fluid. Never use cleaning solvent.**
* **A contaminated brake disc or brake pad reduces braking performance. Discard contaminated pads and clean the disc with high quality brake cleaner or a neutral detergent.**

⚠ CAUTION

Handle brake fluid with care: the fluid reacts chemically with paint, plastics, rubber materials etc.

BRAKE PAD REPLACEMENT

- Remove the reflector ①. (For E-03, E-28, E-33)
- Remove the brake caliper ②.

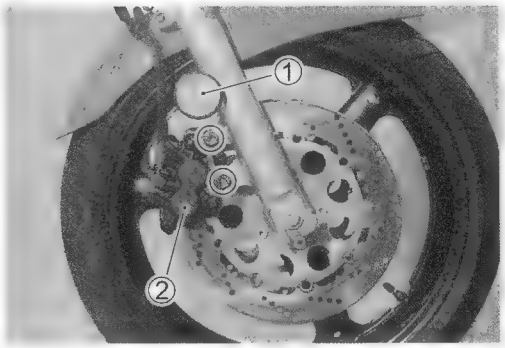

- Remove the brake pads by removing the clip ③ and brake pad mounting pin ④.

⚠ CAUTION

*** Do not operate the brake lever during or after brake pad removal.**
*** Replace the brake pads as a set, otherwise braking performance will be adversely affected.**

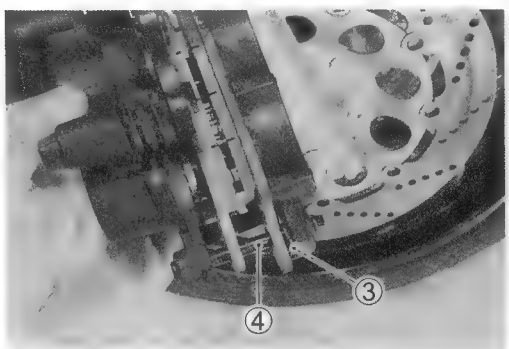

- Install the new brake pads.

⚠ WARNING

Make sure that the brake pad is properly engaged with the guide plate as shown in the photograph.

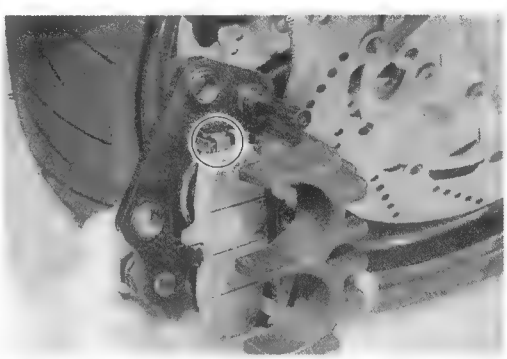

- Remount the reflector ⑥. (For E-03, E-28, E-33)
- Tighten the brake caliper mounting bolts ⑤ to the specified torque.

Brake caliper mounting bolt: 39 N·m (3.9 kgf·m, 28.0 lb-ft)

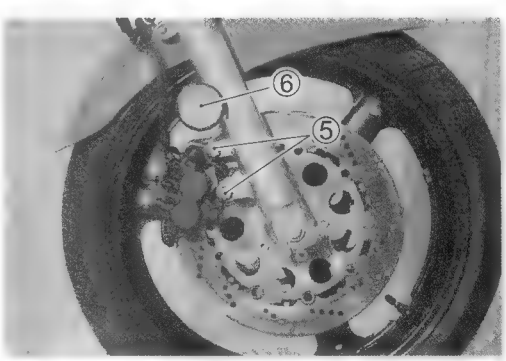

NOTE:
After replacing the brake pads, pump the brake lever a few times to check for proper brake operation and then check the brake fluid level.

BRAKE FLUID REPLACEMENT

- Place the motorcycle on a level surface and keep the handlebar straight.
- Remove the master cylinder reservoir cap and diaphragm.
- Suck up the old brake fluid as much as possible.
- Fill the reservoir with new brake fluid.

Specification and classification: DOT 4

- Connect a clear hose ① to the air bleeder valve ② and insert the other end of the hose into a receptacle.
- Loosen the air bleeder valve and pump the brake lever until the old brake fluid is completely out of the brake system.
- Close the air bleeder valve and disconnect the clear hose. Fill the reservoir with new brake fluid to the upper end of the inspection window.

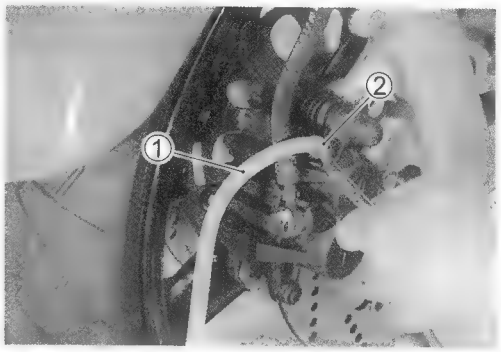

⚠ CAUTION

Bleed air from the brake system. (☞ 2-18)

BRAKE CALIPER REMOVAL AND DISASSEMBLY

- Remove the reflector. (For E-03, E-28, E-33)
- Disconnect the brake hose from the brake caliper by removing the brake hose union bolt ① and allow the brake fluid to drain into a suitable receptacle.
- Remove the brake caliper by removing the brake caliper mounting bolts ②.

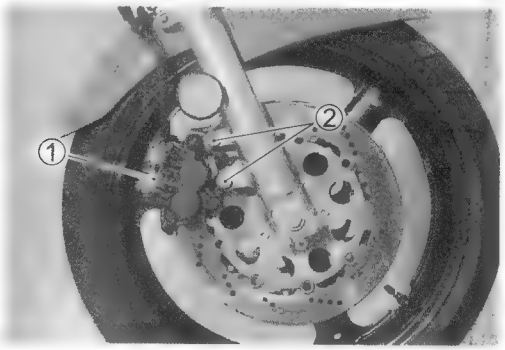

⚠ CAUTION

Never reuse the brake fluid left over from previous servicing and which has been stored for long periods of time.

⚠ WARNING

Brake fluid, if it leaks, will interfere with safe running and discolor painted surfaces. Check the brake hose and hose joints for cracks and oil leakage.

- Remove the brake pads. (☞ 5-42)
- Remove the brake caliper holder ①.

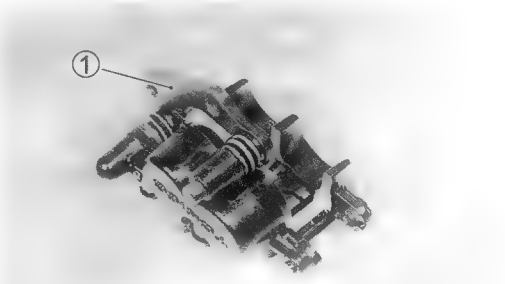

- Remove the spring ②.

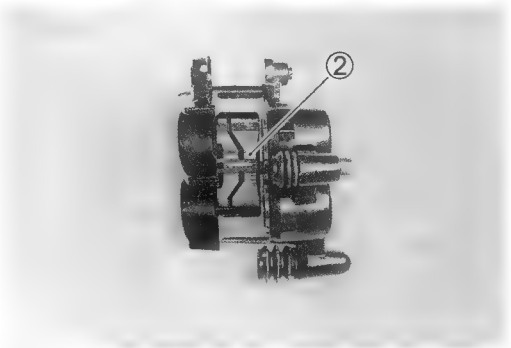

- Place a rag over the brake caliper piston to prevent it from popping out and then force out the piston using compressed air.

⚠ CAUTION

Do not use high pressure air to prevent brake caliper piston damage.

- Remove the dust seals and piston seals.

⚠ CAUTION

Do not reuse the dust seals and piston seals to prevent fluid leakage.

BRAKE CALIPER INSPECTION

BRAKE CALIPER

Inspect each brake caliper cylinder wall for nicks, scratches or other damage.

BRAKE CALIPER PISTONS

Inspect the brake caliper pistons for any scratches or other damage.

RUBBER PARTS

The removed rubber parts ① should be replaced with new ones.

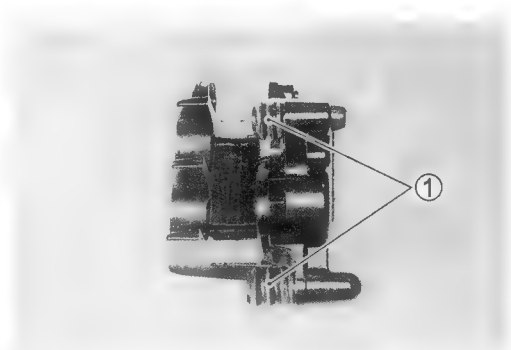

BRAKE CALIPER REASSEMBLY AND REMOUNTING

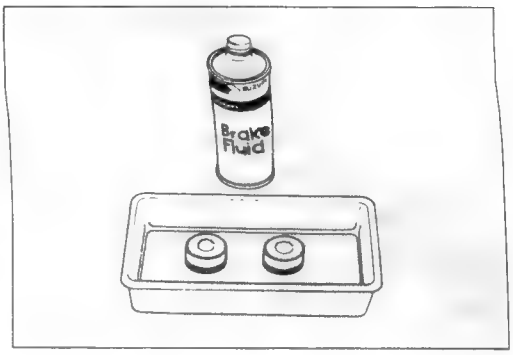

Reassemble and remount the brake caliper in the reverse order of removal and disassembly. Pay attention to the following points:

- Wash the caliper bores and pistons with the specified brake fluid. Thoroughly wash the dust seal grooves and piston seal grooves.

BF Specification and classification: DOT 4

⚠ CAUTION

*** Wash the brake caliper components with new brake fluid before reassembly.**
*** Do not wipe the brake fluid off after washing the components.**
*** When washing the components, use the specified brake fluid. Never use different types of fluid or cleaning solvents such as gasoline, kerosine, etc.**
*** Replace the piston seals and dust seals with new ones.**
*** Apply brake fluid to all of the seals, brake caliper bores and pistons before reassembly.**

BRAKE CALIPER HOLDER

- Apply SUZUKI SILICON GREASE to the brake caliper holder.

SH 99000-25100: SUZUKI SILICONE GREASE

- Remount the reflector ①. (For E-03, E-28, E-33)
- Tighten the brake caliper mounting bolts ② and brake hose union bolt ③ to the specified torque.

Brake caliper mounting bolt ②:
39 N·m (3.9 kgf·m, 28.0 lb-ft)
Brake hose union bolt ③:
23 N·m (2.3 kgf·m, 16.5 lb-ft)

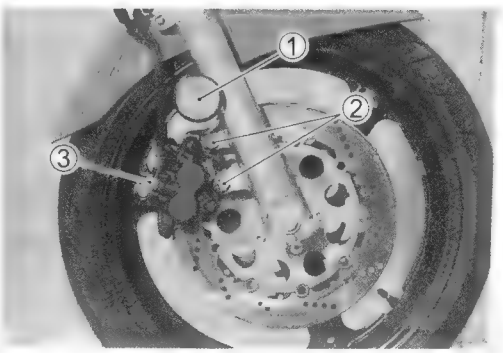

NOTE:
Before remounting the brake caliper, push the brake caliper pistons all the way into the caliper.

⚠ CAUTION

Bleed air from the system after reassembling the brake caliper. (☞ 2-18)

BRAKE DISC INSPECTION

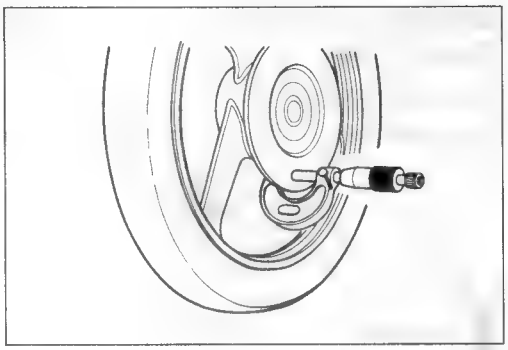

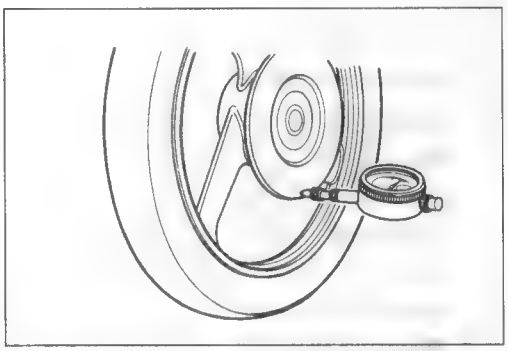

- Remove the front and rear wheels. (☞ 5-9 and -28)

Check the brake disc for damage or cracks. Measure the thickness using the micrometer.
Replace the brake disc if the thickness is less than the service limit or if damage is found.

TOOL **09900-20205: Micrometer (0 – 25 mm)**

DATA **Brake disc thickness**
Service Limit (front) : 4.0 mm (0.16 in)
(rear) : 4.5 mm (0.18 in)

Measure the runout using the dial gauge.
Replace the disc if the runout exceeds the service limit.

TOOL **09900-20606: Dial gauge (1/100 mm)**
09900-20701: Magnetic stand

DATA **Brake disc runout**
Service Limit (front and rear): 0.3 mm (0.012 in)

BRAKE DISC REMOVAL AND REMOUNTING

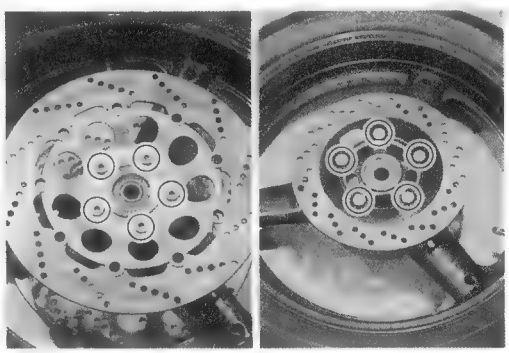

- Remove the front and rear wheels. (☞ 5-9 and -28)
- Remove the front and rear brake discs.

When remounting the brake discs, pay attention to the following points:

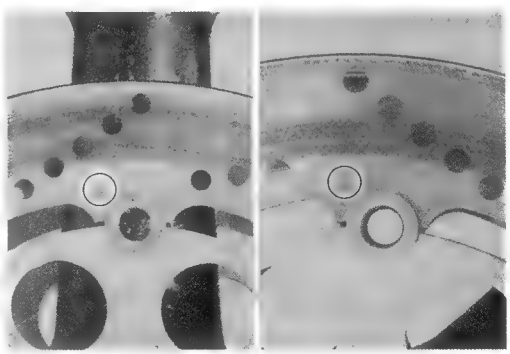

- Set the L (left) and R (right) mark on the front brake disc to the same side of the front wheel.
- Make sure that the brake discs are clean and free of any grease. Apply THREAD LOCK SUPER "1360" to the brake disc bolts and tighten them to the specified torque.

1360 **99000-32130: THREAD LOCK SUPER "1360"**

Brake disc bolts: 23 N·m (2.3 kgf·m, 16.5 lb-ft)

MASTER CYLINDER REMOVAL AND DISASSEMBLY

- Disconnect the front brake light switch lead wires ①.

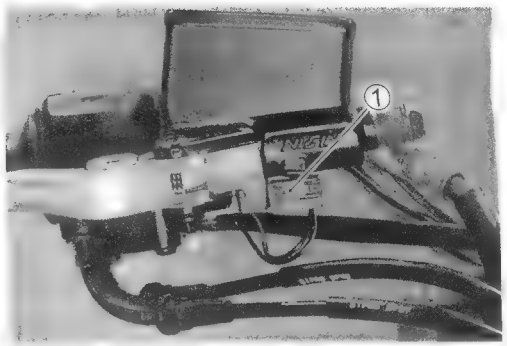

- Place a rag underneath the brake hose union bolt on the master cylinder to catch any spilt brake fluid. Remove the brake hose union bolt and disconnect the brake hose.

⚠ CAUTION

Immediately wipe off any brake fluid contacting any part of the motorcycle. The brake fluid reacts chemically with paint, plastics and rubber materials, etc., and will damage them severely.

- Remove the master cylinder assembly.

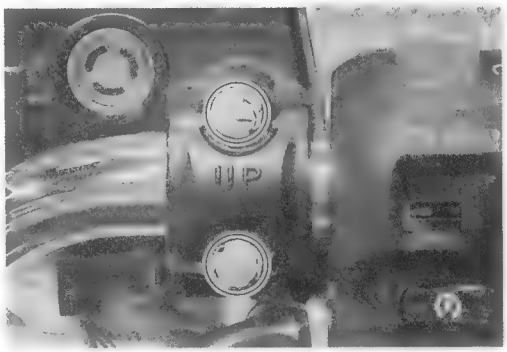

- Remove the brake lever ② and brake light switch ③.

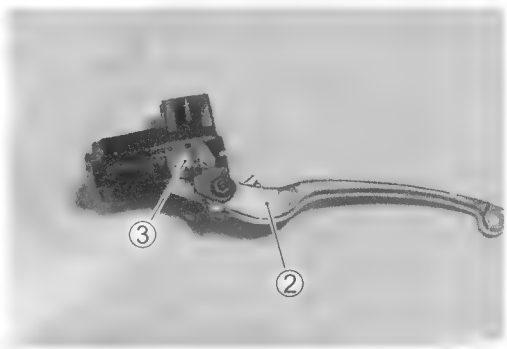

- Remove the reservoir cap ④, plate ⑤ and diaphragm ⑥.
- Drain the brake fluid.

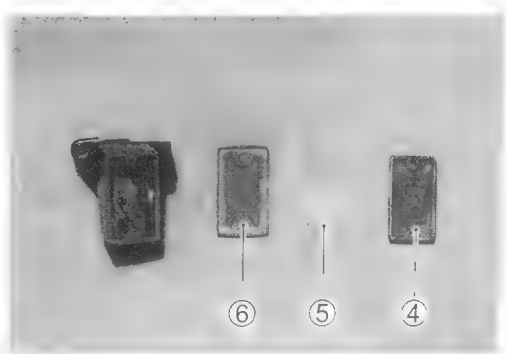

- Pull the dust boot ① out and remove the circlip ②.

09900-06108: Snap ring pliers

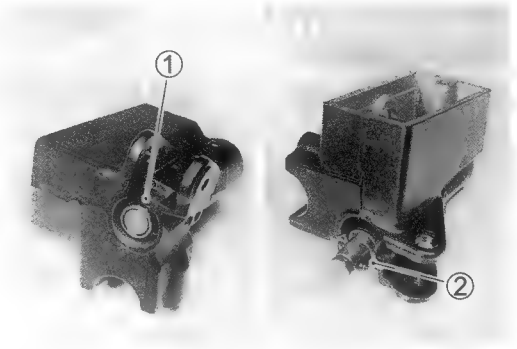

- Remove the piston/secondary cup, primary cup and spring.

③ Secondary cup
④ Piston
⑤ Primary cup
⑥ Spring

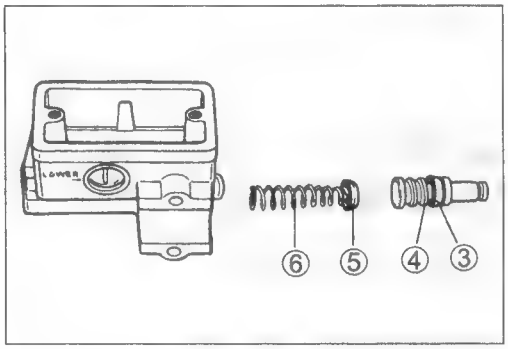

MASTER CYLINDER INSPECTION

MASTER CYLINDER

Inspect the master cylinder bore for any scratches or other damage.

PISTON

Inspect the piston surface for any scratches or other damage.

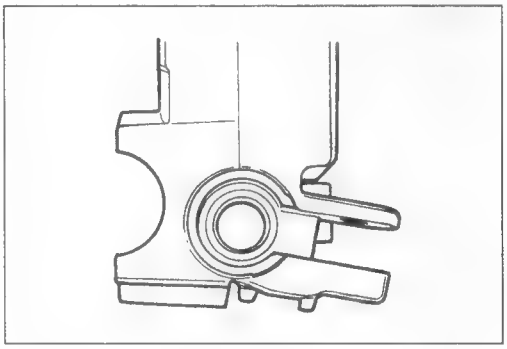

RUBBER PARTS

Inspect the primary cup, secondary cup and dust seal for wear or damage.

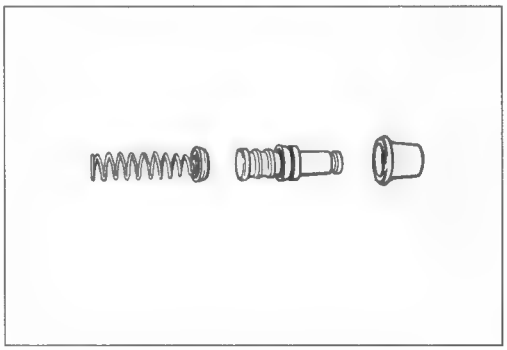

MASTER CYLINDER REASSEMBLY AND REMOUNTING

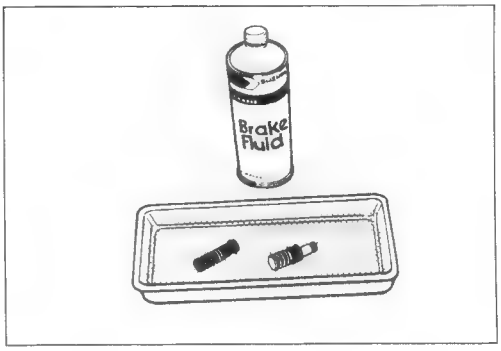

Reassemble and remount the master cylinder in the reverse order of removal and disassembly. Pay attention to the following points:

⚠ CAUTION

*** Wash the master cylinder components with new brake fluid before reassembly.**
*** Do not wipe the brake fluid off after washing the components.**
*** When washing the components, use the specified brake fluid. Never use different types of fluid or cleaning solvents such as gasoline, kerosine, etc.**
*** Apply brake fluid to the master cylinder bore and all of the master cylinder components before reassembly.**

Specification and classification: DOT 4

- When installing the brake light switch, align the projection on the switch with the hole in the master cylinder.

- When remounting the master cylinder onto the handlebar, align the master cylinder holder's mating surface ① with the punch mark ② on the handlebar and tighten the upper holder bolt first.

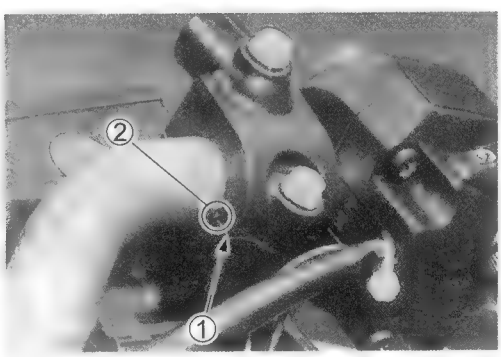

Ⓐ Master cylinder
Ⓑ Master cylinder upper holder bolt
Ⓒ Handlebar
Ⓓ Clearance

Master cylinder holder bolt (upper and lower): 10 N·m (1.0 kgf·m, 7.0 lb-ft)

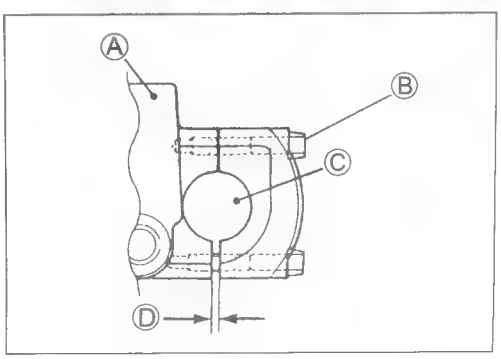

- Tighten the brake hose union bolt to the specified torque.

Brake hose union bolt: 23 N·m (2.3 kgf·m, 16.5 lb-ft)

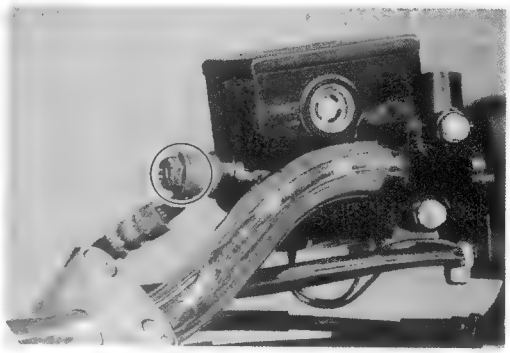

⚠ CAUTION

Bleed air from the brake system after reassembling the master cylinder. (☞ 2-18)

REAR BRAKE

CONSTRUCTION

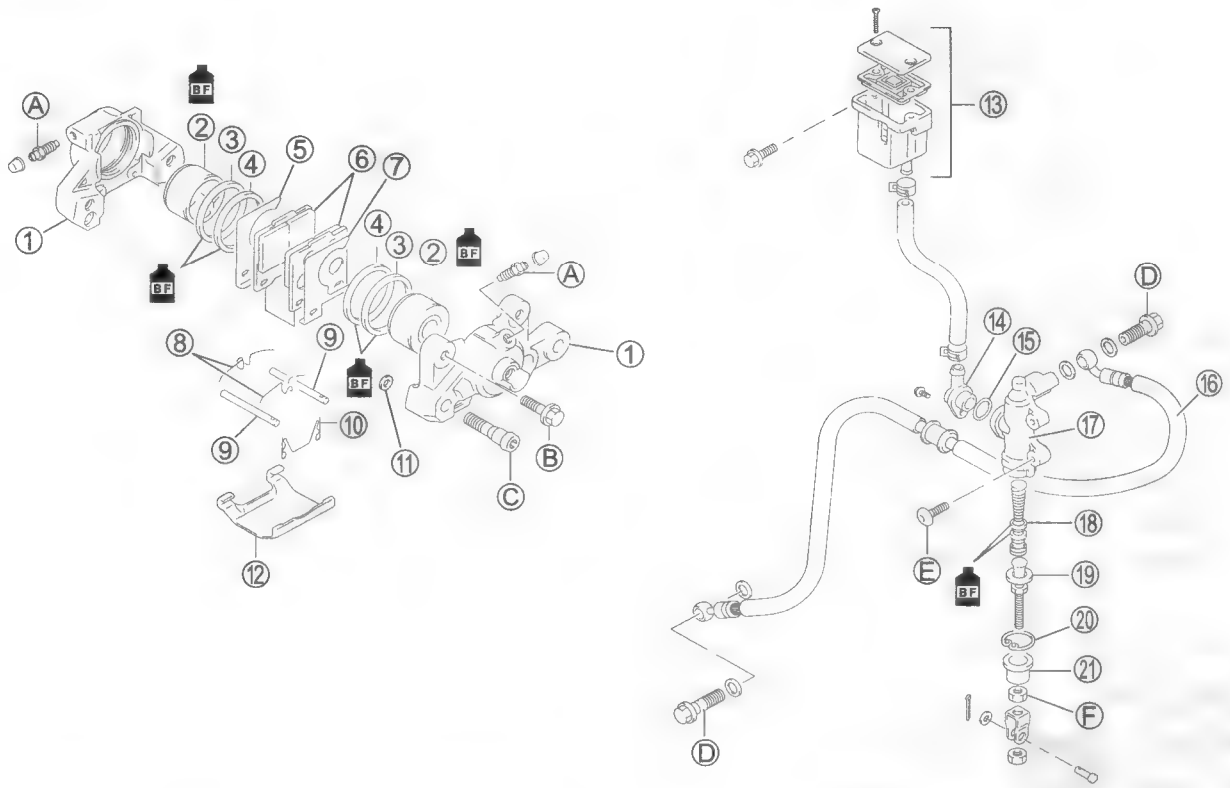

① Brake caliper
② Brake caliper pistons
③ Piston seals
④ Dust seals
⑤ Inner shim
⑥ Brake pads
⑦ Outer shim
⑧ Springs
⑨ Brake pad mounting pins
⑩ Clip
⑪ O-ring
⑫ Brake pad cover
⑬ Reservoir
⑭ Brake hose connector
⑮ O-ring
⑯ Brake hose
⑰ Master cylinder
⑱ Piston/cup set
⑲ Push rod
⑳ Circlip
㉑ Dust boot

Ⓐ Air bleeder valve
Ⓑ Brake caliper mounting bolt
Ⓒ Brake caliper housing bolt
Ⓓ Brake hose union bolt
Ⓔ Master cylinder mounting bolt
Ⓕ Master cylinder rod locknut

ITEM	N·m	kgf·m	lb-ft
Ⓐ	8	0.8	6.0
Ⓑ	25	2.5	18.0
Ⓒ	30	3.0	21.5
Ⓓ	23	2.3	16.5
Ⓔ	23	2.3	16.5
Ⓕ	18	1.8	13.0

⚠ WARNING

*** This brake system is filled with an ethylene glycol-based DOT 4 brake fluid. Do not use or mix different types of fluid, such as silicone-based or petroleum-based brake fluids.**
*** Do not use any brake fluid taken from old, used or unsealed containers. Never reuse brake fluid left over from the last servicing or which has been stored for long periods of time.**
*** When storing brake fluid, seal the container completely and keep it away from children.**
*** When replenishing brake fluid, take care not to get dust into the fluid.**
*** When washing brake components, use new brake fluid. Never use cleaning solvent.**
*** A contaminated brake disc or brake pad reduces braking performance. Discard contaminated pads and clean the disc with high quality brake cleaner or a neutral detergent.**

⚠ CAUTION

Handle brake fluid with care: the fluid reacts chemically with paint, plastics, rubber materials etc.

BRAKE PAD REPLACEMENT

- Remove the brake pad cover.

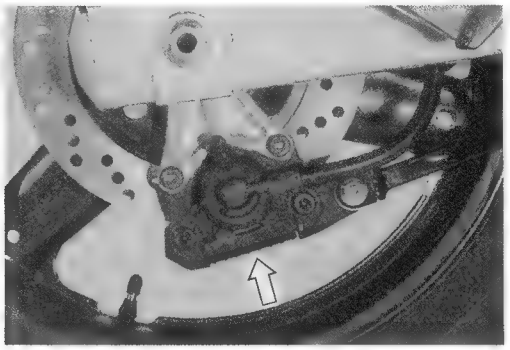

- Remove the clip ①.
- Remove the brake pads along with the shims by removing the brake pad mounting pins ② and springs ③.

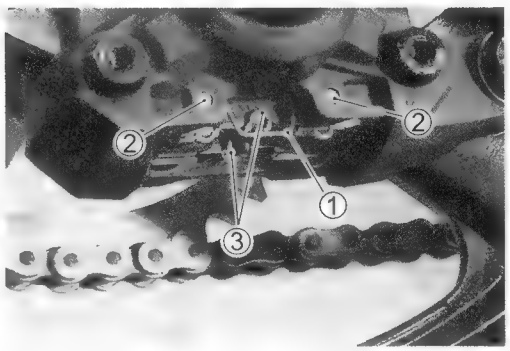

⚠ CAUTION

*** Do not operate the brake pedal during or after brake pad removal.**
*** Replace the brake pads as a set, otherwise braking performance will be adversely affected.**

- Install the new brake pads and shims.

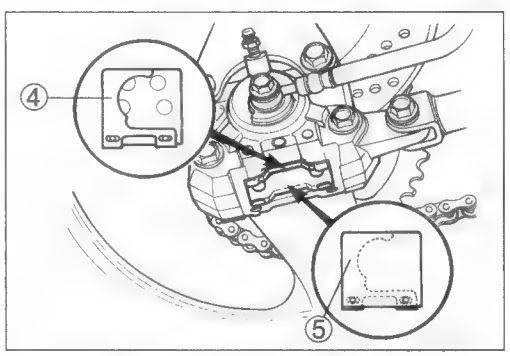

⚠ CAUTION

Be sure to properly install the shims (④, ⑤) as shown in the illustration.

NOTE:
After replacing the brake pads, pump the brake pedal a few times to operate the brake correctly and then check the brake fluid level.

BRAKE FLUID REPLACEMENT

- Remove the seat. (☞ 5-5)
- Remove the side frame cover (right side). (☞ 5-6)
- Remove the reservoir cap.
- Replace the brake fluid. (☞ 5-42)

BF Specification and classification: DOT 4

⚠ CAUTION

Bleed air from the brake system. (☞ 2-18)

BRAKE CALIPER REMOVAL AND DISASSEMBLY

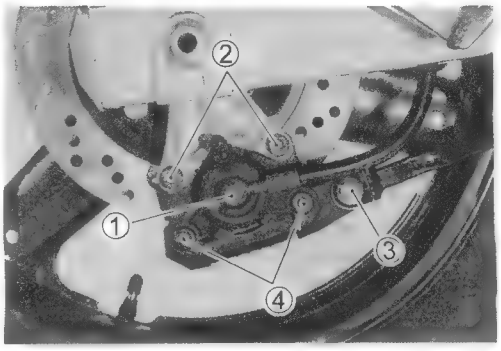

- Remove the brake hose union bolt ① and allow the brake fluid to drain into a suitable receptacle.
- Remove the brake caliper mounting bolts ② and rear torque link nut ③.

NOTE:
Slightly loosen the brake caliper housing bolts ④ to facilitate later disassembly before removing the brake caliper mounting bolts.

⚠ CAUTION

Never reuse the brake fluid left over from previous servicing and which has been stored for long periods of time.

⚠ WARNING

Brake fluid, if it leaks, will interfere with safe running and discolor painted surfaces. Check the brake hose and hose joints for cracks and oil leakage.

- Remove the brake pads. (☞ 5-52)
- Remove the brake caliper housing bolts ⑤.

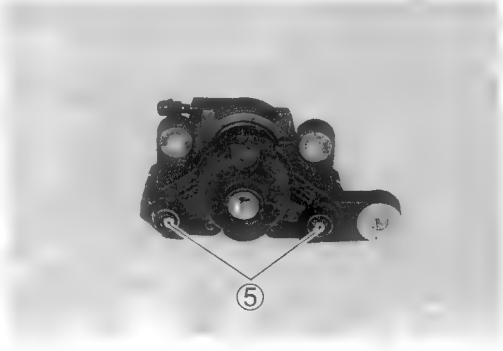

- Separate the brake caliper halves.
- Remove the O-ring ⑥.

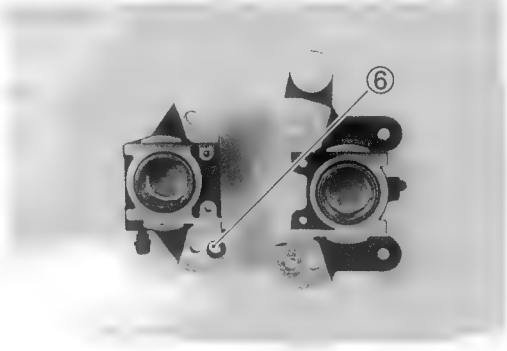

⚠ CAUTION

Replace the O-ring with a new one.

- Place a rag over the brake caliper piston to prevent it from popping out and then force out the piston using compressed air.

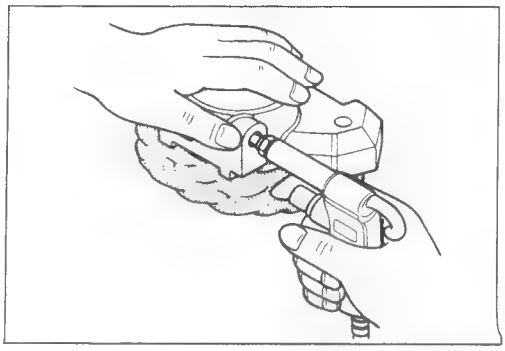

⚠ CAUTION

Do not use high pressure air to prevent brake caliper piston damage.

- Remove the dust seals and piston seals.

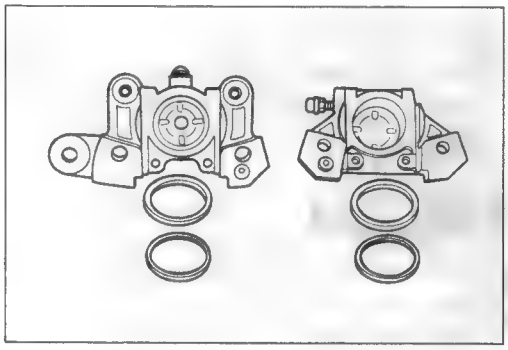

⚠ CAUTION

Do not reuse the dust seals and piston seals to prevent fluid leakage.

BRAKE CALIPER INSPECTION

BRAKE CALIPER ..... (☞ 5-44)
BRAKE CALIPER PISTONS ..... (☞ 5-44)
BRAKE DISC ..... (☞ 5-46)

DATA **Brake disc thickness (rear)**
Service Limit: 4.5 mm (0.18 in)
DATA **Brake disc runout (rear)**
Service Limit: 0.30 mm (0.012 in)

BRAKE CALIPER REASSEMBLY AND REMOUNTING

Reassemble and remount the brake caliper in the reverse order of removal and disassembly. Pay attention to the following points:

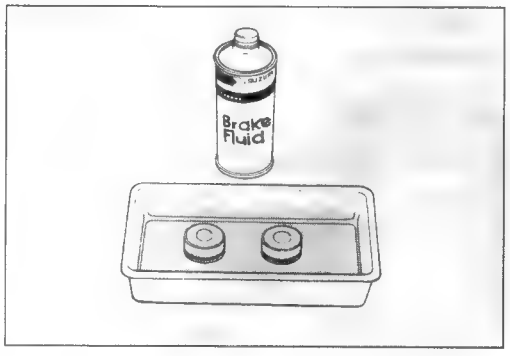

⚠ CAUTION

- **Wash the brake caliper components with new brake fluid before reassembly.**
- **Do not wipe the brake fluid off after washing the components.**
- **When washing the components, use the specified brake fluid. Never use different types of fluid or cleaning solvents such as gasoline, kerosine, etc.**
- **Replace the piston seals and dust seals with new ones.**
- **Apply brake fluid to all of the seals, brake caliper bores and pistons before reassembly.**

BF **Specification and classification: DOT 4**

- Tighten each bolt to the specified torque.

Brake caliper housing bolt ①:
30 N·m (3.0 kgf·m, 21.5 lb-ft)
Brake caliper mounting bolt ②:
25 N·m (2.5 kgf·m, 18.0 lb-ft)
Brake hose union bolt ③: 23 N·m (2.3 kgf·m, 16.5 lb-ft)
Rear torque link nut ④: 35 N·m (3.5 kgf·m, 25.5 lb-ft)

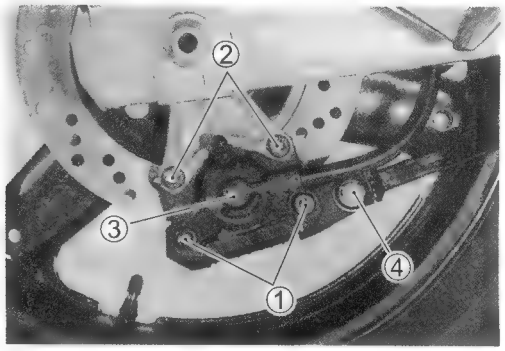

NOTE:
Before remounting the brake caliper, push the brake caliper pistons all the way into the caliper.

⚠ CAUTION

Bleed air from the system after reassembling the brake caliper. (☞ 2-18)

MASTER CYLINDER REMOVAL AND DISASSEMBLY

- Remove the side frame cover ① (right side).

- Remove the reservoir mounting bolt ②.
- Place a rag underneath the brake hose union bolt on the master cylinder to catch any spilt brake fluid. Remove the brake hose union bolt ③ and disconnect the brake hose.
- Loosen the locknut ④.
- Remove the master cylinder along with the reservoir by removing the mounting bolts ⑤ and push rod ⑥.

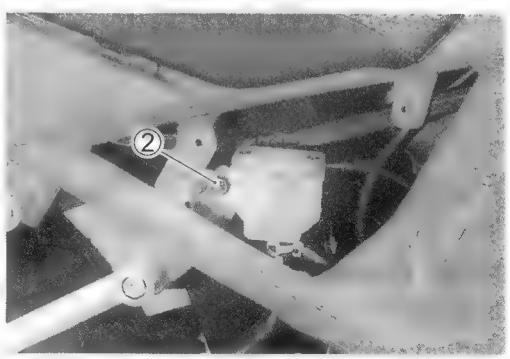

⚠ CAUTION

Immediately wipe off any brake fluid contacting any part of the motorcycle. The brake fluid reacts chemically with paint, plastics and rubber materials, etc., and will damage them severely.

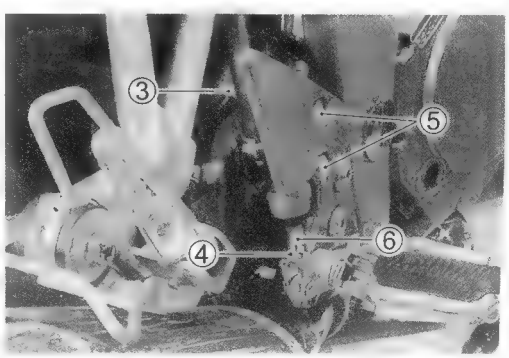

- Remove the brake hose connector by removing the screw.
- Remove the O-ring ①.

⚠ CAUTION

Replace the O-ring with a new one.

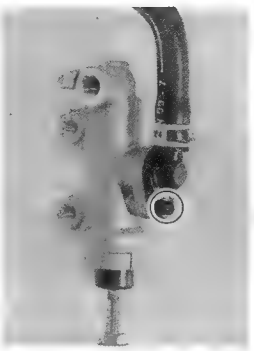

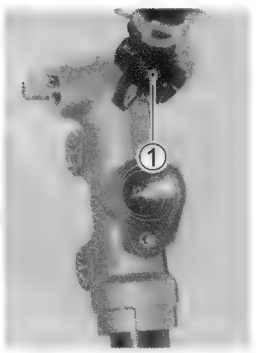

- Pull the dust boot ② out and remove the circlip ③.

TOOL 09900-06108: Snap ring pliers

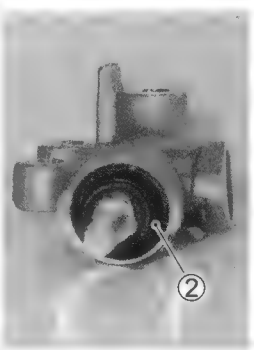

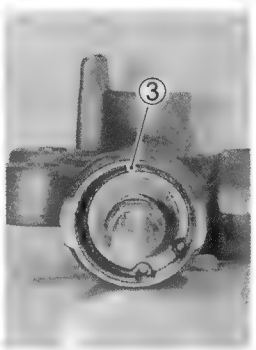

- Remove the push rod ④, piston/primary cup ⑤ and spring ⑥.

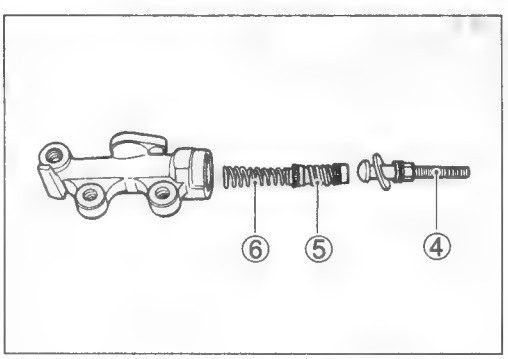

MASTER CYLINDER INSPECTION

MASTER CYLINDER

Inspect the master cylinder bore for any scratches or other damage.

PISTON

Inspect the piston surface for any scratches or other damage.

RUBBER PARTS

Inspect the primary/secondary cup and all of the rubber parts for damage.

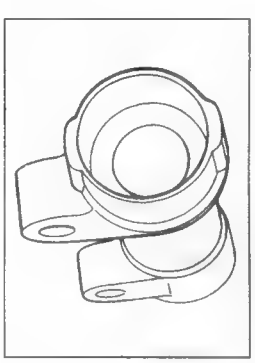

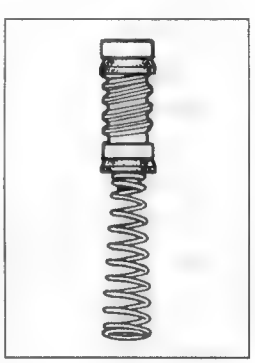

MASTER CYLINDER REASSEMBLY AND REMOUNTING

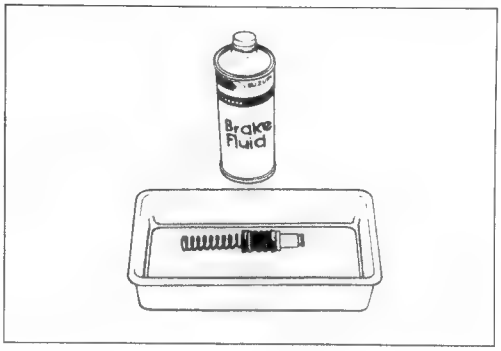

Reassemble and remount the master cylinder in the reverse order of removal and disassembly. Pay attention to the following points:

⚠ CAUTION

*** Wash the master cylinder components with new brake fluid before reassembly.**
*** Do not wipe the brake fluid off after washing the components.**
*** When washing the components, use the specified brake fluid. Never use different types of fluid or cleaning solvents such as gasoline, kerosine, etc.**
*** Apply brake fluid to the master cylinder bore and all of the master cylinder components before reassembly.**

BF Specification and Classification: DOT 4

- Tighten each bolt to the specified torque.

Master cylinder mounting bolt ①:
23 N·m (2.3 kgf·m, 16.5 lb-ft)
Master cylinder rod locknut ②:
18 N·m (1.8 kgf·m, 13.0 lb-ft)
Brake hose union bolt ③: 23 N·m (2.3 kgf·m, 16.5 lb-ft)

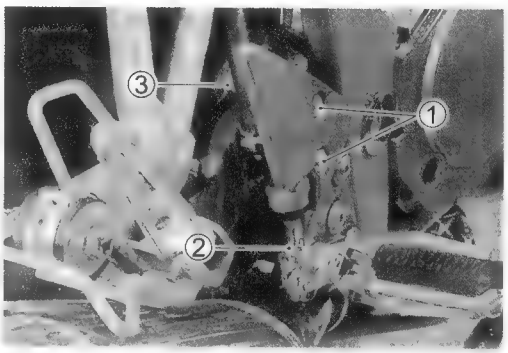

TIRE AND WHEEL

TIRE REMOVAL

The most critical factor of a tubeless tire is the seal between the wheel rim and the tire bead. For this reason, it is recommended to use a tire changer that can satisfy this sealing requirement and can make the operation efficient as well as functional.
For operating procedures, refer to the instructions supplied by the tire changer manufacturer.

NOTE:
When removing the tire in the case of repair or inspection, mark the tire with a chalk to indicate the tire position relative to the valve position.

Even though the tire is refitted to the original position after repairing puncture, the tire may have to be balanced again since such a repair can cause imbalance.

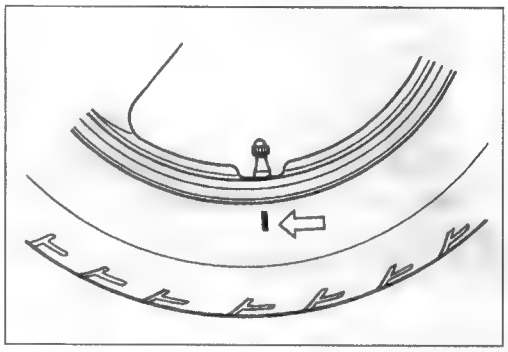

INSPECTION

WHEELS

Wipe off any rubber substance or rust from the wheel, and inspect the wheel rim. If any one of the following items are observed, replace the wheel with a new one.

* A distortion or crack.
* Any scratches or flaws in the bead seating area.
* Wheel runout (axial & radial) of more than 2.0 mm (0.08 in).

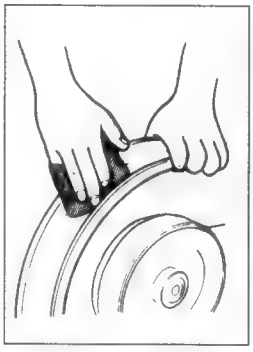

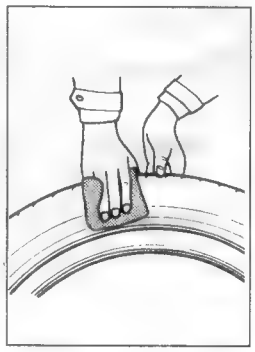

DATA **Wheel rim runout**
Service Limit (axial and radial): 2.0 mm (0.08 in)

TIRES

Thoroughly inspect the removed tire, and if any one of the following items are observed, replace the tire with a new one; do not repair it.

* A puncture or split whose total length or diameter exceeds 6.0 mm (0.24 in).
* A scratch or split on the side wall.
* Tread depth less than 1.6 mm (0.06 in) on the front tire and less than 2.0 mm (0.08 in) on the rear tire.

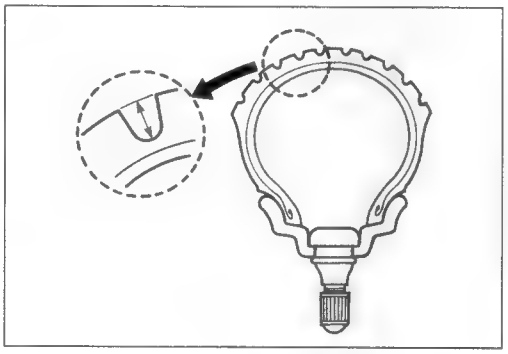

TOOL **09900-20805: Tire depth gauge**

DATA **Tire tread depth**
Service Limit (Front): 1.6 mm (0.06 in)
(Rear): 2.0 mm (0.08 in)

* Ply separation
* Tread separation.
* Tread wear is extraordinarily deformed or distributed around the tire.
* Scratches at the bead.
* Cord is cut.
* Damage from skidding (flat spots).
* Abnormality in the inner liner.

NOTE:
When repairing a flat tire, follow the repair instructions and use only recommended repairing materials.

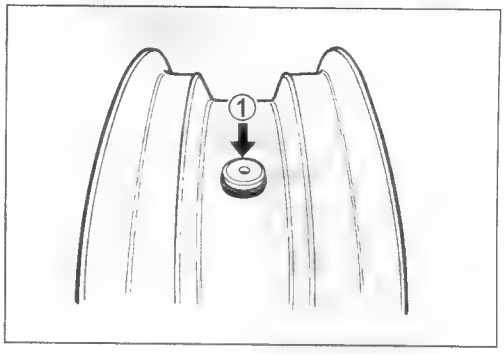

VALVE INSPECTION
Inspect the valve ① after the tire is removed from the rim, and replace the valve with a new one if the seal rubber has any splits or scratches.

Inspect the removed valve core and replace it with a new one if the seal ② is abnormally deformed or worn.

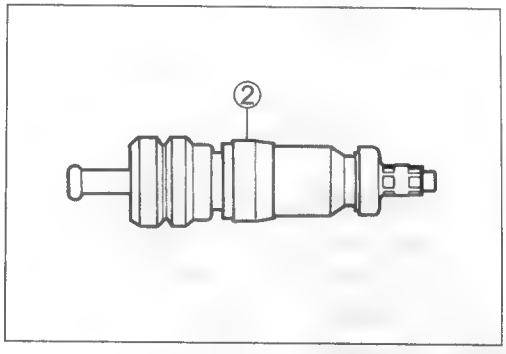

VALVE INSTALLATION
Clean any dust or rust which is around the valve hole ① and then install the valve in the rim.

NOTE:
To properly install the valve ② into the valve hole, apply a special tire lubricant or neutral soapy liquid to the valve.

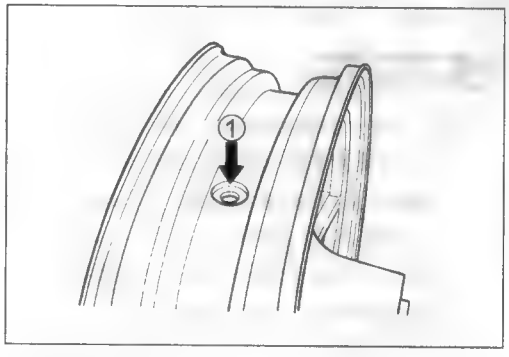

⚠ CAUTION

Be careful not to damage the valve lip Ⓐ.

Ⓑ Wheel

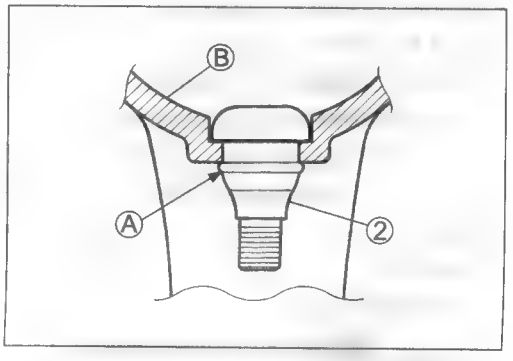

TIRE INSTALLATION

- Apply tire lubricant to the tire bead.
- When installing the tire onto the wheel, observe the following points.

⚠ CAUTION

Do not reuse the valve which has been once removed.

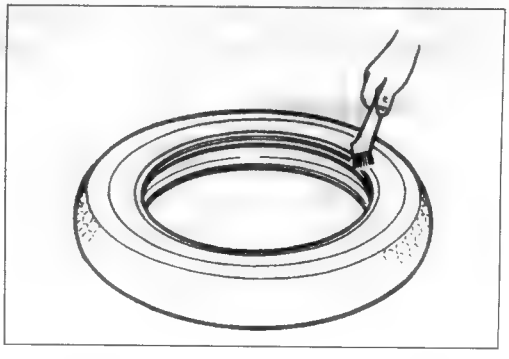

- The tire is designed to have specified rotational direction.

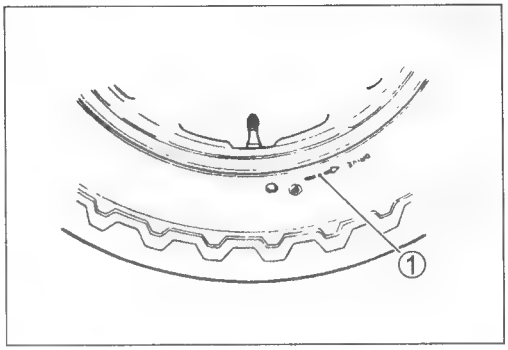

⚠ CAUTION

Never use oil, grease or gasoline on the tire bead in place of tire lubricant.

- When installing the tire, the arrow ① on the side wall should point the direction of wheel rotation.
- Align the chalk mark put on the tire at the time of removal with the valve position.

- For installation procedure of tire onto the wheel, follow the instructions given by the tire changer manufacturer.
- Bounce the tire several times while rotating. This makes the tire bead expand outward to contact the wheel, thereby facilitating air inflation.
- Pump up the tire with air.

⚠ WARNING

*** Do not inflate the tire to more than 400 kPa (4.0 kgf/cm²). If inflated beyond this limit, the tire can burst and possibly cause injury. Do not stand directly over the tire while inflating.**
*** In the case of preset pressure air inflator, pay special care for the set pressure adjustment.**

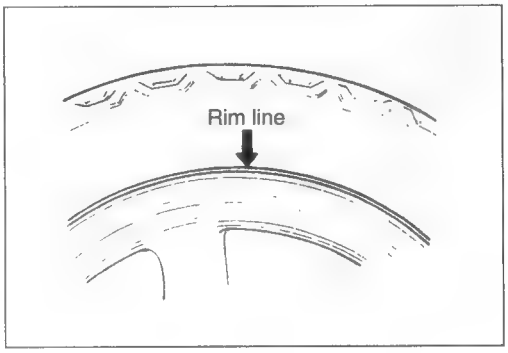

- In this condition, check the "rim line" cast on the tire side walls. The line must be equidistant from the wheel rim all around. If the distance between the rim line and wheel rim varies, this indicates that the bead is not properly seated. If this is the case, deflate the tire completely and unseat the bead for both sides. Coat the bead with lubricant and fit the tire again.
- When the bead has been fitted properly, inflate air and adjust the pressure to specification.
- As necessary, adjust the tire balance.

⚠ CAUTION

Do not run with a repaired tire at a high speed.

TIRE PRESSURE

COLD INFLATION TIRE PRESSURE	SOLO RIDING			DUAL RIDING		
	kPa	kgf/cm²	psi	kPa	kgf/cm²	psi
FRONT	225	2.25	33	225	2.25	33
REAR	250	2.50	36	250	2.50	36

ELECTRICAL SYSTEM

CONTENTS

CAUTIONS IN SERVICING 6- 2
LOCATION OF ELECTRICAL COMPONENTS 6- 5
CHARGING SYSTEM 6- 7
DESCRIPTION (GENERATOR WITH IC REGULATOR) 6- 7
TROUBLE SHOOTING 6- 8
INSPECTION 6- 9
GENERATOR 6-10
REMOVAL AND DISASSEMBLY 6-11
INSPECTION 6-13
REASSEMBLY AND REMOUNTING 6-16
STARTER SYSTEM AND SIDE-STAND IGNITION INTERLOCK SYSTEM 6-18
STARTER SYSTEM DESCRIPTION 6-18
SIDE-STAND/IGNITION INTERLOCK SYSTEM DESCRIPTION 6-18
TROUBLESHOOTING 6-20
STARTER MOTOR REMOVAL AND DISASSEMBLY 6-21
STARTER MOTOR INSPECTION 6-21
STARTER MOTOR REASSEMBLY AND REMOUNTING 6-22
STARTER RELAY INSPECTION 6-23
SIDE-STAND/IGNITION INTERLOCK SYSTEM PART INSPECTION 6-24
IGNITION SYSTEM (DIGITAL IGNITOR) 6-27
DESCRIPTION 6-27
TROUBLESHOOTING 6-28
INSPECTION 6-29
COMBINATION METER 6-33
REMOVAL 6-33
DISASSEMBLY 6-33
INSPECTION 6-33
LAMPS 6-37
HEADLIGHT 6-37
BRAKE LIGHT/TAILLIGHT AND LICENSE PLATE LIGHT 6-38
TURN SIGNAL LIGHTS 6-38
RELAYS 6-39
STARTER RELAY 6-39
TURN SIGNAL/SIDE-STAND RELAY 6-39
SWITCHES 6-40
BATTERY 6-41
SPECIFICATIONS 6-41
REMOVAL 6-41
REMOUNTING 6-41
INITIAL CHARGING 6-42
SERVICING 6-43
RECHARGING OPERATION 6-44

CAUTIONS IN SERVICING

CONNECTORS

- When disconnecting a connector, be sure to hold the terminals; do not pull the lead wires.
- When connecting a connector, push it in so it is firmly attached.
- Inspect the connector for corrosion, contamination and any breakage in the cover.

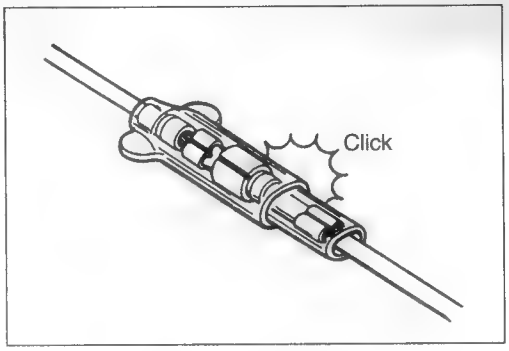

COUPLERS

- With a lock-type coupler, be sure to release the lock before disconnecting it. When connecting a coupler, push it in until the lock clicks shut.
- When disconnecting a coupler, be sure to hold the coupler; do not pull the lead wires.
- Inspect each terminal on the coupler for looseness or bends.
- Inspect each terminal for corrosion and contamination.

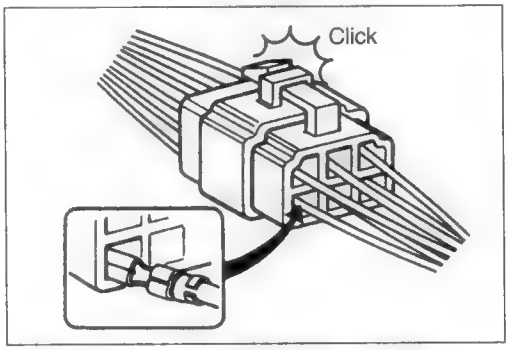

CLAMPS

- Refer to "WIRE HARNESS, CABLE AND HOSE ROUTING" (☞7-12) for proper clamping procedures.
- Bend the clamp properly, as shown in the illustration.
- When clamping the wire harness, do not allow it to hang down.
- Do not use wire or any other substitute for the band-type clamp.

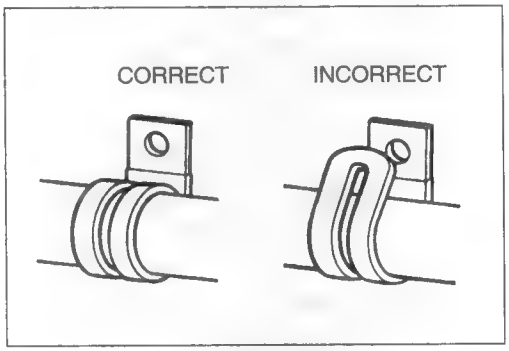

FUSES

- When a fuse blows, always investigate the cause, correct the problem and then replace the fuse.
- Do not use a fuse of a different capacity.
- Do not use any substitutes for the fuse (e.g., wire).

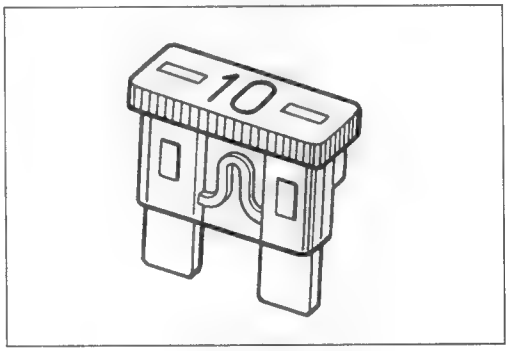

SEMI-CONDUCTOR EQUIPPED PARTS

- Do not drop any part that contains a semi-conductor (e.g., ignition unit, IC regulator).
- When inspecting the part, follow the inspection instructions carefully. Neglecting proper procedures may cause this part to be damaged.

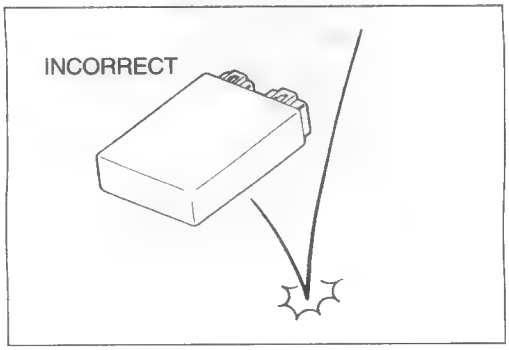

BATTERY

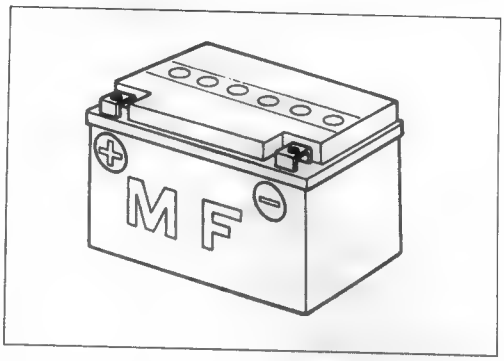

- The MF battery used in this motorcycle does not require maintenance (e.g., electrolyte level inspection, distilled water replenishing).
- During normal charging, no hydrogen gas is produced. However, if the battery is overcharged, hydrogen gas may be produced. Therefore, be sure that there are no fire or spark sources nearby (e.g., short-circuit) when charging the battery.
- Be sure to recharge the battery in a well-ventilated and open area.
- Note that the charging system for the MF battery is different from that of a conventional battery. Do not replace the MF battery with a conventional battery.

CONNECTING THE BATTERY

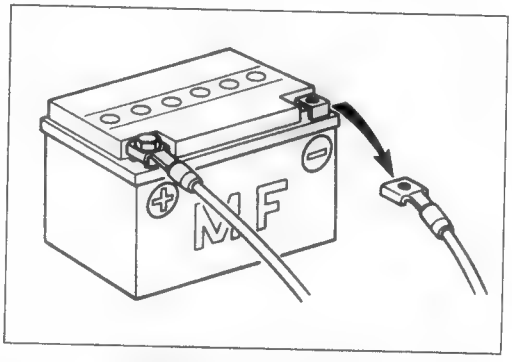

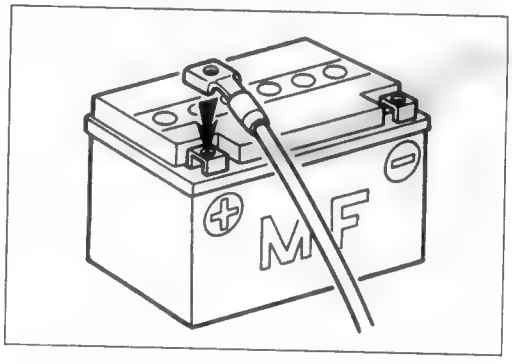

- When disconnecting terminals from the battery for disassembly or servicing, be sure to disconnect the battery (⊖) lead wire, first.
- When connecting the battery lead wires, be sure to connect the battery (⊕) lead wire, first.
- If the terminal is corroded, remove the battery, pour warm water over it and clean it using a wire brush.
- After connecting the battery, apply a light coat of grease to the battery terminals.
- Reinstall the cover over the battery (⊕) terminal.

WIRING PROCEDURE

- Properly route the wire harness according to "WIRE HARNESS, CABLE AND HOSE ROUTING". (☞7-12)

USING THE MULTI CIRCUIT TESTER

- Properly use the multi circuit tester (⊕) and (⊖) probes. Improper use can cause damage to the motorcycle and tester.
- If the voltage and current values are not known, begin measuring in the highest range.
- When measuring the resistance, make sure that no voltage is applied. If voltage is applied, the tester will be damaged.
- After using the tester, turn the switch to the OFF position.

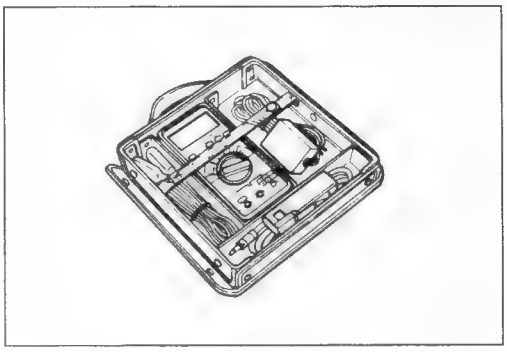

⚠ CAUTION

Before using the multi circuit tester, read its instruction manual.

LOCATION OF ELECTRICAL COMPONENTS

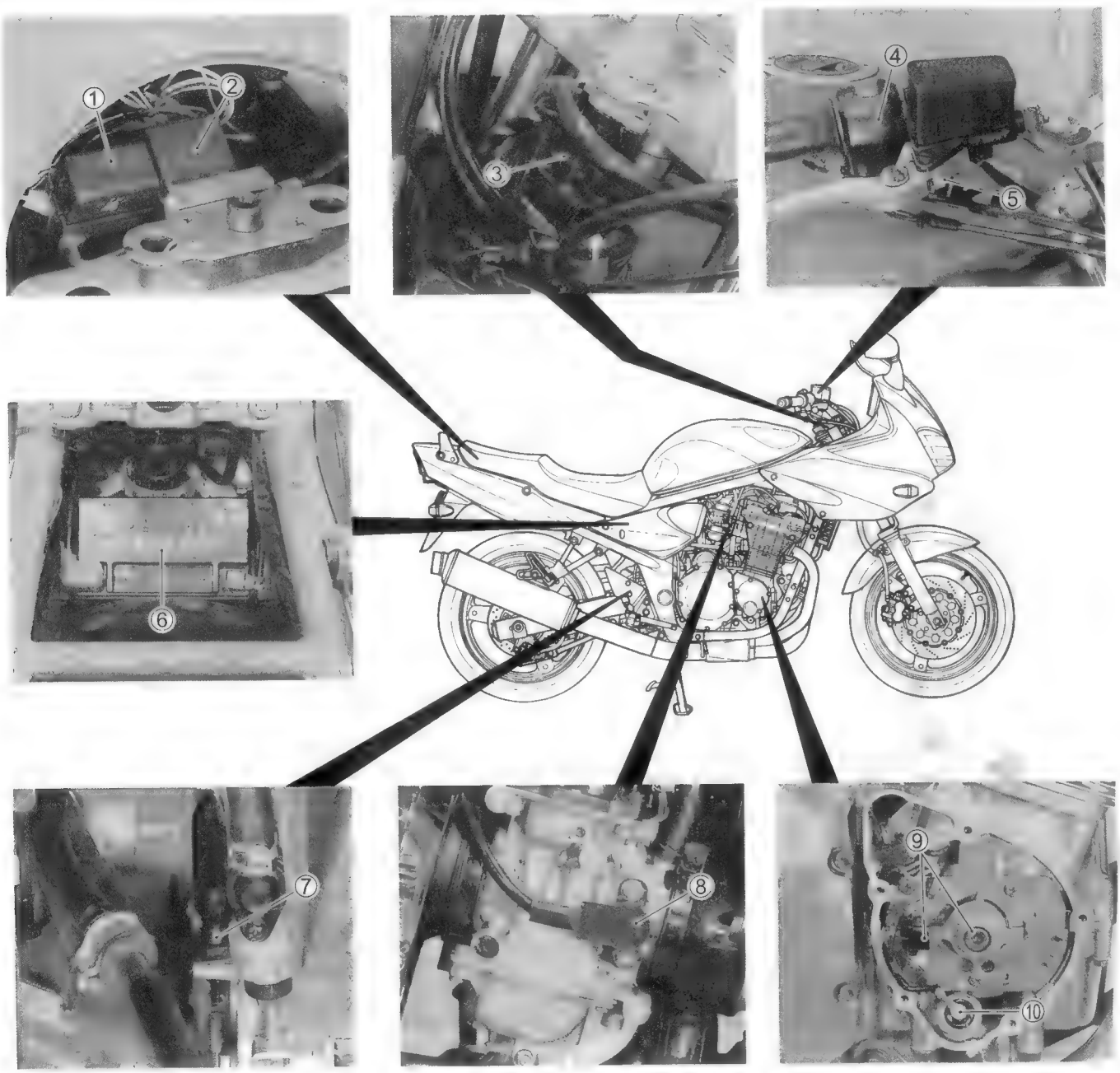

① Turn signal/side-stand relay
② Fuse box
③ Ignition switch
④ Handlebar switch (R)
⑤ Front brake light switch
⑥ Battery
⑦ Rear brake light switch
⑧ Throttle position sensor
⑨ Signal generator
⑩ Oil pressure switch

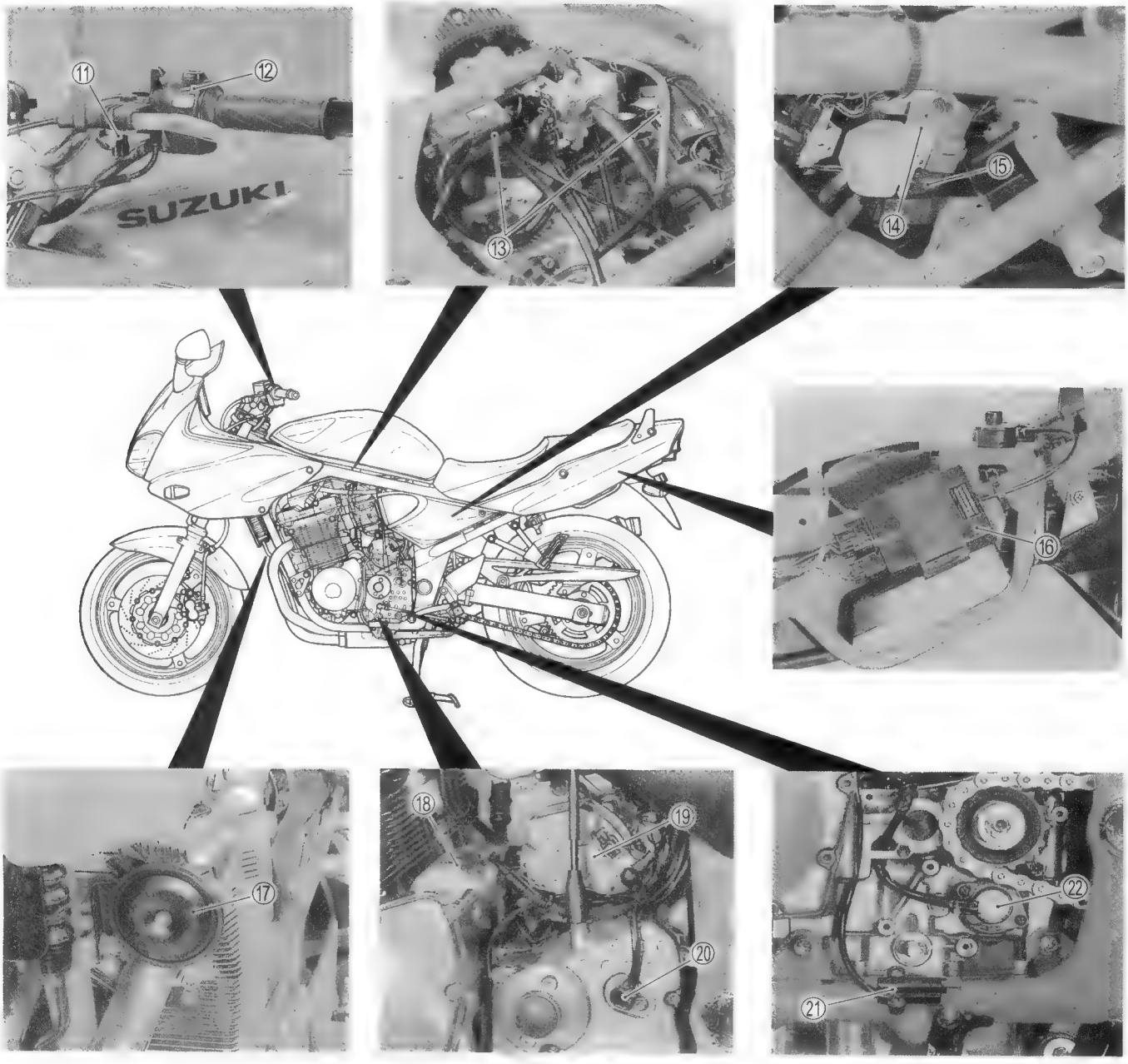

⑪ Clutch lever position switch
⑫ Handlebar switch (L)
⑬ Ignition coil
⑭ Main fuse
⑮ Starter relay
⑯ Ignitor
⑰ Horn
⑱ Starter motor
⑲ Generator
⑳ Speed sensor
㉑ Side-stand switch
㉒ Gear position switch

CHARGING SYSTEM

DESCRIPTION (GENERATOR WITH IC REGULATOR)

The generator features a solid-state regulator that is mounted inside the generator. All regulator components are enclosed into a solid mold, and this unit is attached to the brush holder frame. The regulator voltage setting cannot be adjusted.

Two brushes carry current through the two slip rings to the rotor coil which is mounted on the rotor.

The stator windings are assembled on the inside of a laminated core that forms part of the generator housing. A rectifier bridge, which is connected to the stator windings, contains eight diodes, and electrically changes the stator A.C. voltage to D.C. voltage which appears at the generator output terminal.

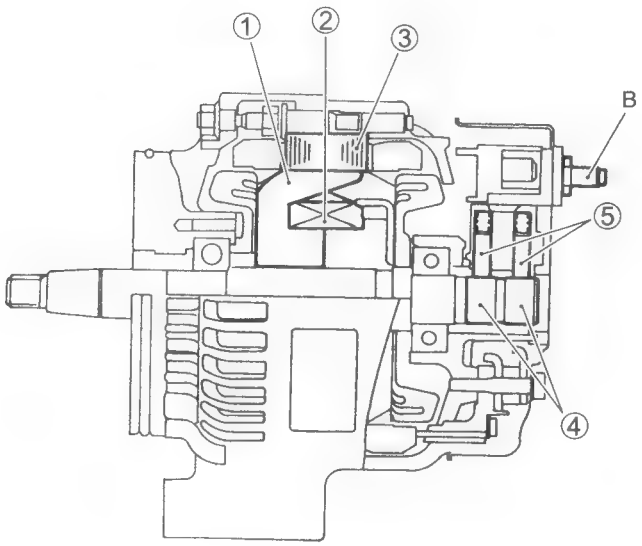

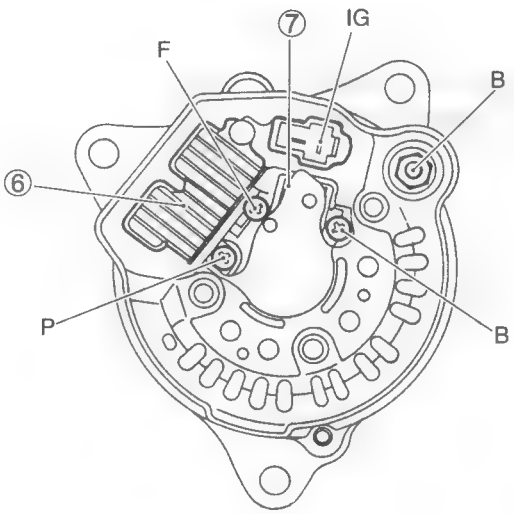

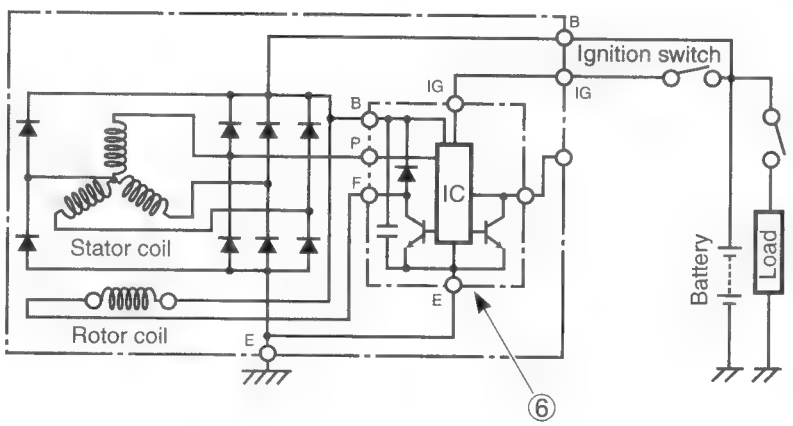

① Rotor
② Rotor coil
③ Stator coil
④ Slip rings
⑤ Brushes
⑥ IC regulator
⑦ Brush holder

B : Battery terminal
IG : Ignition terminal
F : Rotor coil terminal
P : Stator coil terminal
E : Ground

TROUBLESHOOTING

Battery runs down quickly.

Check accessories which use excessive amounts of electricity.
- Accessories are installed → • Remove accessories
- No accessories ↓

Check the battery for current leaks. (☞6-9)
- Current leaks → • Short circuit of the wire harness • Loose or disconnected wires • Faulty battery
- No current leaks ↓

Measure the charging voltage between the battery terminals. (☞6-9)
- Correct → • Faulty battery • Abnormal driving condition
- Incorrect ↓

Measure the continuity of the stator coil and rotor coil. (☞6-14)
- No continuity → • Faulty stator coil or disconnected lead wires
- Continuity ↓

Inspect the slip rings and brushes. (☞6-14 and 15)
- No good → • Faulty slip ring(-s) or brush(-es)
- OK ↓

Inspect the rectifier and IC regulator. (☞6-15)
- No good → • Faulty rectifier or IC regulator.
- OK ↓

Inspect the wires.
- No good → • Short circuit of wire harness • Poor contact of couplers
- OK ↓

• Faulty battery

Others

Battery overcharges	• Faulty IC regulator • Faulty battery • Poor contact of generator lead wire coupler

INSPECTION

BATTERY CURRENT LEAK INSPECTION

- Turn the ignition switch to the "OFF" position.
- Remove the seat. (☞5-5)
- Remove the document tray. (☞5-5)
- Disconnect the battery ⊖ lead wire.
- Connect the multi circuit tester between the battery ⊖ terminal and the battery ⊖ lead wire.

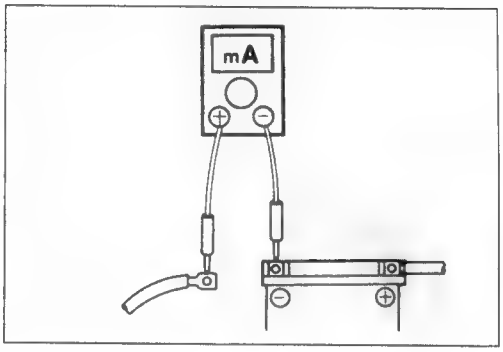

NOTE:
Leakage is evident if the reading is over 1mA.

TOOL 09900-25008: Multi circuit tester set

DATA Battery current leak: Under 1mA

Tester knob indication: Current (⎓, 20mA)

⚠ CAUTION

*** Because the current leak might be large, turn the tester to the high range first to avoid tester damage.**
*** Do not turn the ignition switch to the "ON" position when measuring the current.**

When checking to find the excessive current leak, remove the couplers and connectors, one by one, checking each part.

CHARGING OUTPUT INSPECTION

- Remove the seat. (☞5-5)
- Remove the document tray. (☞5-5)
- Start the engine, turn the lighting switch to ON and the dimmer switch to HI and run the engine at 5 000 r/min.

Measure the DC voltage between the battery ⊕ and ⊖ terminals using the multi circuit tester. If the tester reads under 13.6 V or over 14.4 V, inspect the stator coil, rectifier and IC regulator which are mounted in the generator.

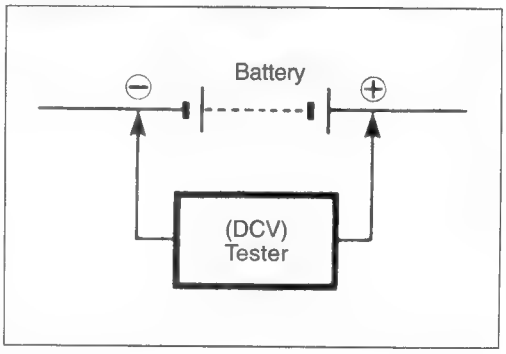

NOTE:
When performing this test, make sure that the battery is fully-charged.

TOOL 09900-25008: Multi circuit tester set

Tester knob indication: Voltage (⎓)

DATA Charging output (regulated voltage)
Standard: 13.6 – 14.4 V at 5 000 r/min.

GENERATOR

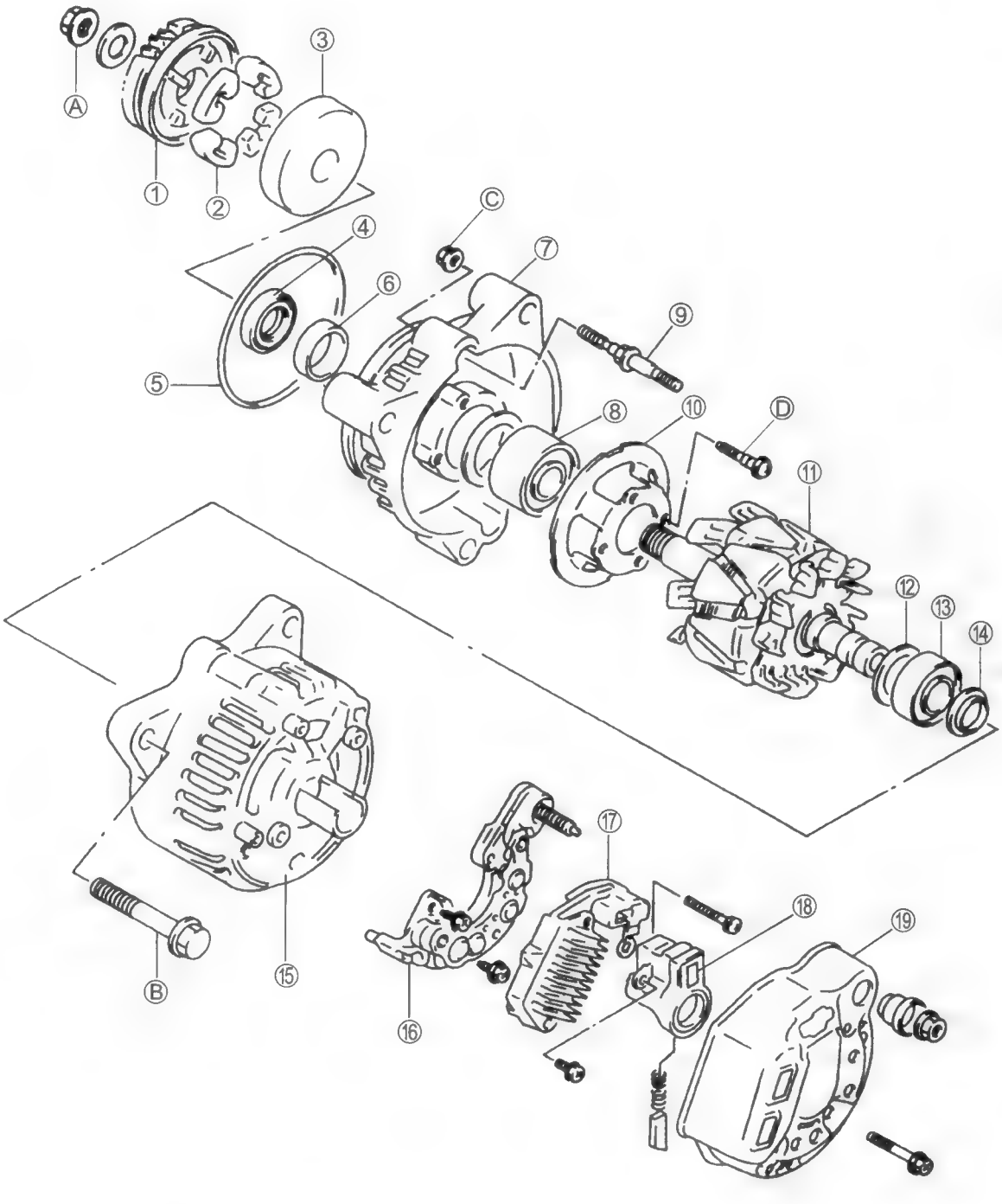

① Generator driven gear
② Damper (4 pcs)
③ Damper housing
④ Oil seal
⑤ O-ring
⑥ Spacer
⑦ Generator end housing
⑧ Bearing
⑨ Stud bolt
⑩ Retainer
⑪ Rotor
⑫ Bearing cover #2
⑬ Slip ring side bearing
⑭ Bearing cover #1
⑮ Generator hausing
⑯ Rectifier
⑰ IC regulator
⑱ Brush holder
⑲ Generator end cover

Ⓐ Generator driven gear nut
Ⓑ Generator mounting bolt
Ⓒ Generator housing nut
Ⓓ Bearing retainer screw

ITEM	N·m	kgf·m	lb-ft
Ⓐ	55	5.5	40.0
Ⓑ	25	2.5	18.0
Ⓒ	4.5	0.45	3.5
Ⓓ	2.5	0.25	1.8

REMOVAL AND DISASSEMBLY

- Remove the engine sprocket cover. (☞3-5)
- Disconnect the generator lead wire ① and coupler ②.

NOTE:
Before disconnecting the generator lead wire, disconnect the battery ⊖ lead wire.

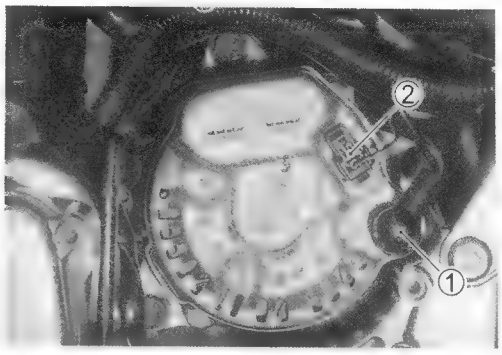

- Remove the generator ③.

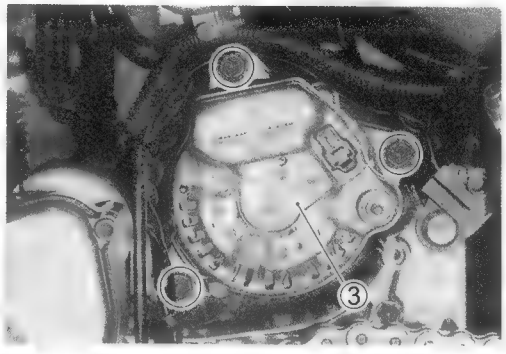

- Hold the generator driven gear using a vise ④ and two pieces of wood ⑤ as shown. Then, remove the generator driven gear nut.

⚠ CAUTION

Do not hold the damper housing ⑥ using the vise or the damper housing will be damaged.

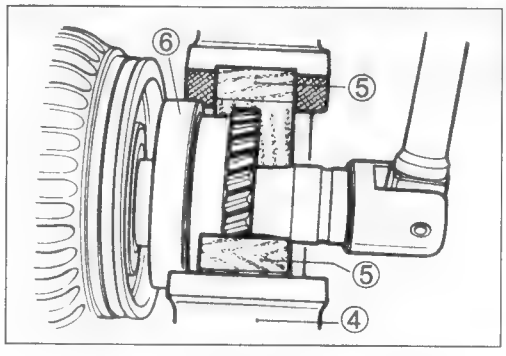

- Remove the damper housing ⑥ using the special tool.

TOOL **09913-61510: Bearing remover**

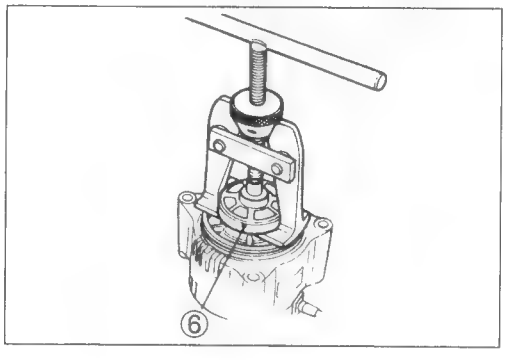

- Remove the generator end cover ⑦.

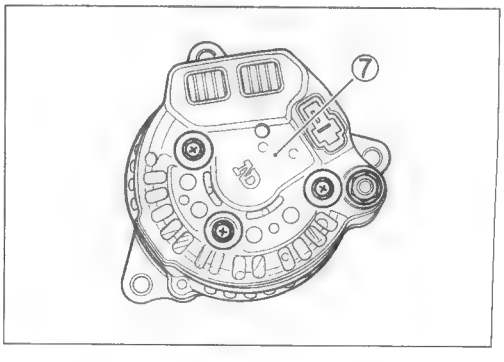

- Remove the brush holder ① and IC regulator ②.

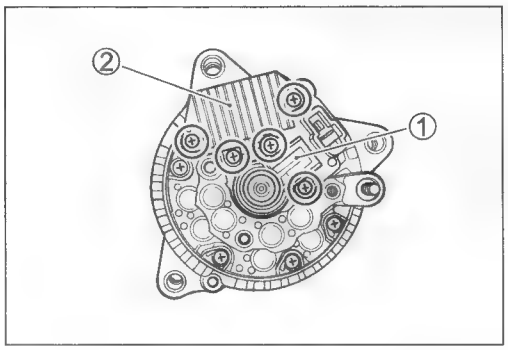

- Remove the stator coil lead wires mounting screws ③.
- Remove the rectifier ④.

NOTE:
Straighten the stator coil lead wires using long-nose pliers, then remove the rectifier.

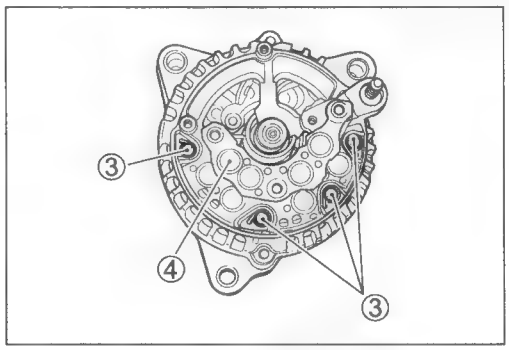

- Remove the generator housing nuts.

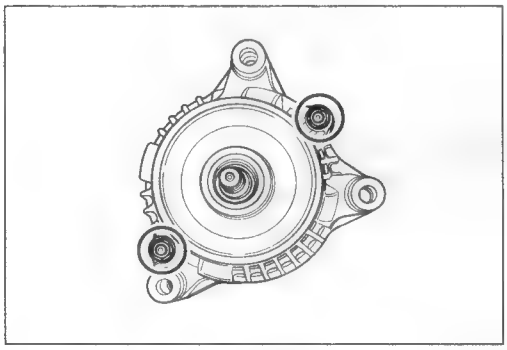

- Separate the generator housing ⑤ from the generator end housing ⑥.

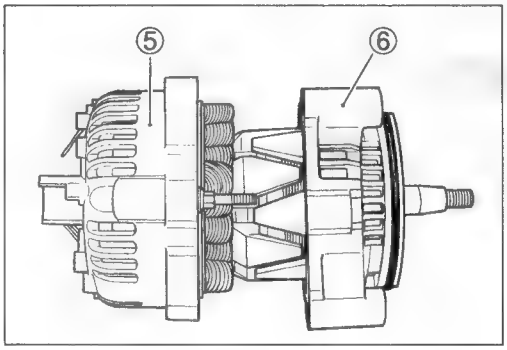

- Remove the rotor ⑦ from the generator end housing ⑧ using a hand press ⑨ as shown.

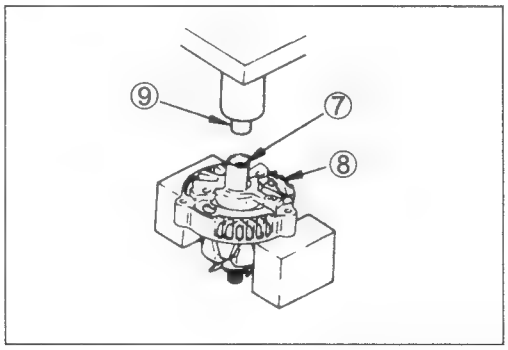

- Remove the bearing retainer ①.

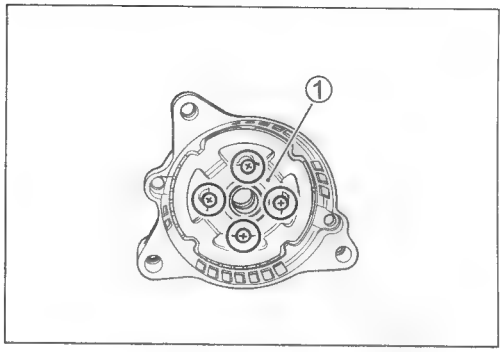

- Remove the bearing ②, washer ③ and spacer ④.

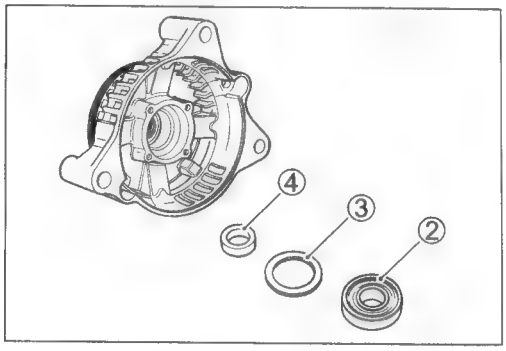

- Remove the oil seal ⑤.

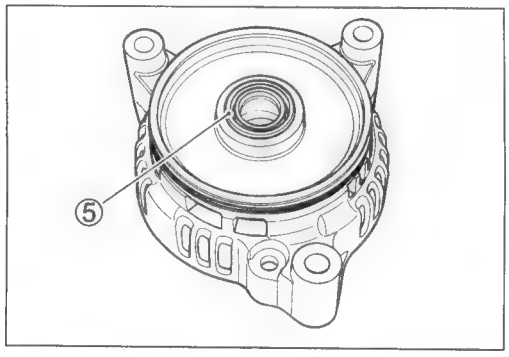

INSPECTION

ROTOR BEARINGS

Inspect the rotor bearings for abnormal noise. Also, rotate the rotor bearings by hand and make sure that they rotate smoothly.

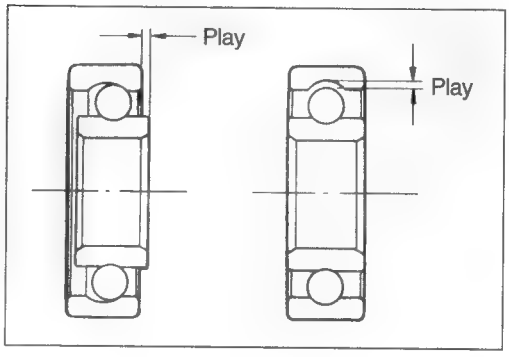

If there is anything unusual, remove the bearing(-s) using the special tool.

TOOL 09913-60910: Bearing remover

⚠ CAUTION

The removed bearing(-s) should be replaced with a new one.

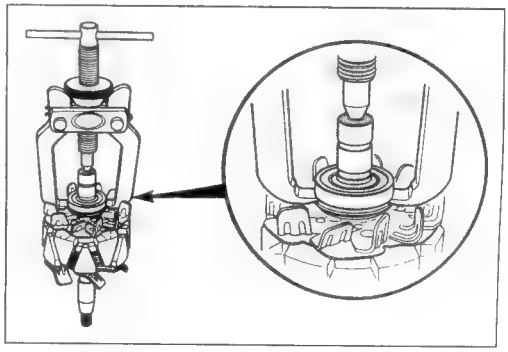

GENERATOR DRIVEN GEAR DAMPERS

Inspect the generator driven gear dampers for wear and damage. If any defects are found, replace the generator driven gear dampers as a set.

NOTE:
When installing the generator driven gear dampers, apply SUZUKI MOLY PASTE to the damper surface.

99000-25140: SUZUKI MOLY PASTE

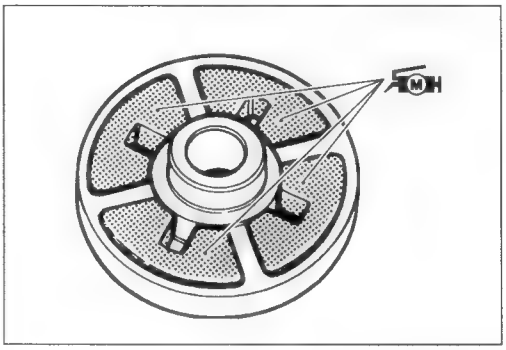

STATOR COIL CONTINUITY CHECK

Measure the continuity between the lead wires of the stator coil using a tester.
If there is no continuity, replace the stator.
Also check that the stator is properly insulated.

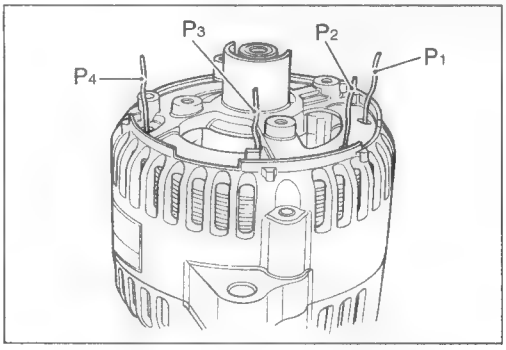

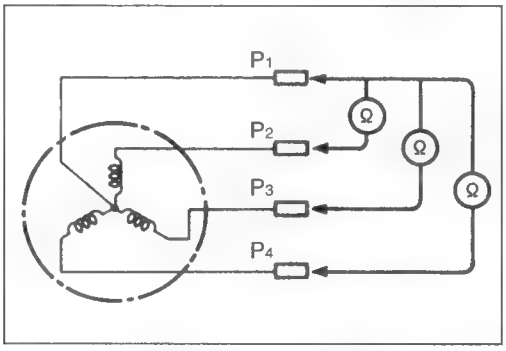

ROTOR COIL CONTINUITY CHECK

Measure the continuity between the two slip rings ① on the rotor coil using a tester.
If there is no continuity, replace the rotor.
Also check that the rotor is properly insulated.

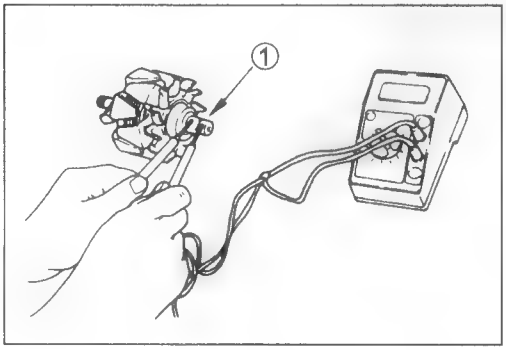

SLIP RINGS

If the slip rings are dirty, polish them with #400 sandpaper and wipe them using a clean, dry cloth.
Then, measure the slip ring O.D. using vernier calipers. If it is less than the service limit, replace the slip rings with new ones.

09900-20102: Vernier calipers (200 mm)

Slip ring O.D.
Service Limit: 14.0 mm (0.55 in)

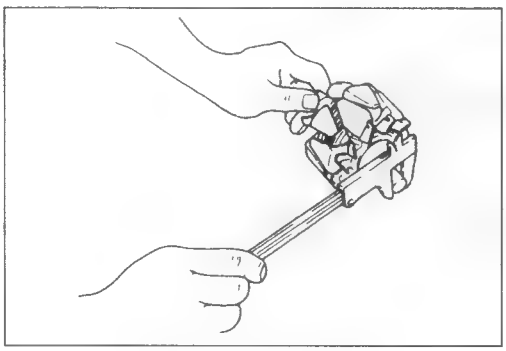

CARBON BRUSHES

Measure the length of the carbon brushes as shown. If the measurement is less then the service limit, replace the carbon brushes with new ones.

09900-20102: Vernier calipers (200 mm)

Brush length
Service Limit: 4.5 mm (0.18 in)

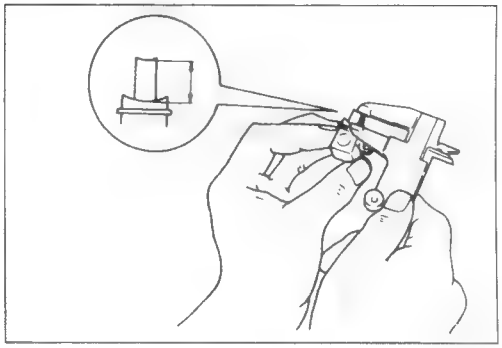

RECTIFIER

Measure the continuity between the terminals ① and grounds ②. Put the tester lead on a terminal ① and the other lead to ground ②. Observe the reading and then switch the leads. One of the readings should indicate continuity and the other reading should indicate infinity (no continuity). If both of the readings are the same (i.e., only continuity or only infinity (no continuity)), replace the rectifier. Perform four more tests between a terminal ① and the other terminals (P_1, P_2, P_3, and P_4), as described above.

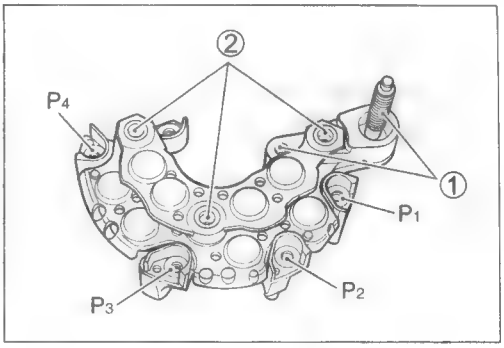

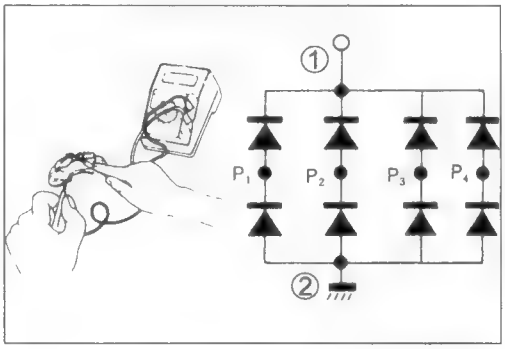

IC REGULATOR

Measure the continuity between terminal "F" and terminal "B". There should be continuity in only one direction.

F : Rotor coil terminal

B : Battery terminal

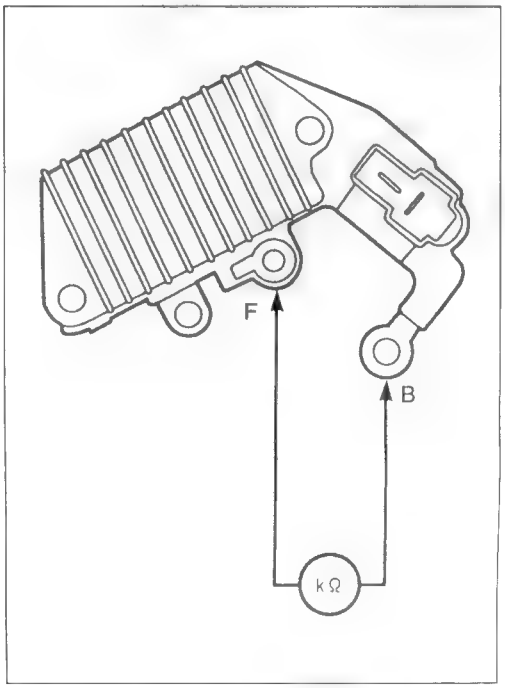

GENERATOR REASSEMBLY AND REMOUNTING

Reassemble and remount the generator in the reverse order of removal and disassembly. Pay attention to the following points:

⚠ CAUTION

The removed oil seal should be replaced with a new one.

- Apply SUZUKI SUPER GREASE "A" to the lip of the oil seal.

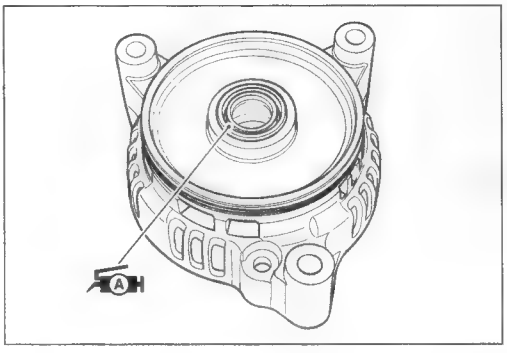

For USA

A 99000-25030: SUZUKI SUPER GREASE "A"

For the other countries

A 99000-25010: SUZUKI SUPER GREASE "A"

- Apply a small quantity of THREAD LOCK "1342" to the bearing retainer screws and tighten them to the specified torque.

1342 99000-32050: THREAD LOCK "1342"

Bearing retainer screw: 2.5 N·m (0.25 kgf·m, 1.8 lb-ft)

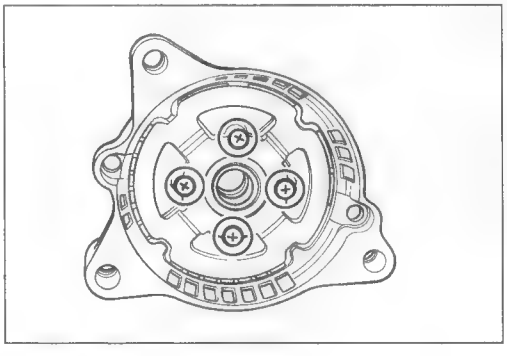

- Install the bearing and rotor using a hand-press.

① Hand-press
② Jig
③ Rotor
④ Bearing
⑤ Bearing cover #1
⑥ Bearing cover #2
⑦ Expander ring

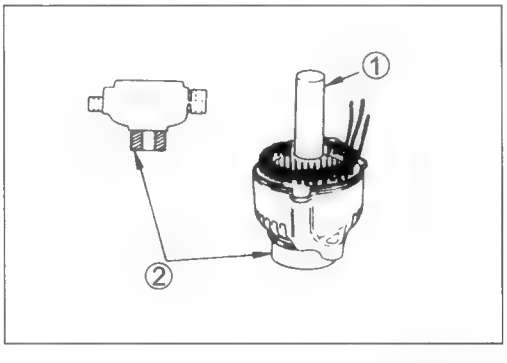

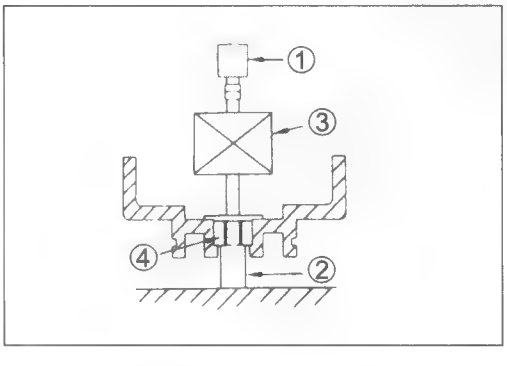

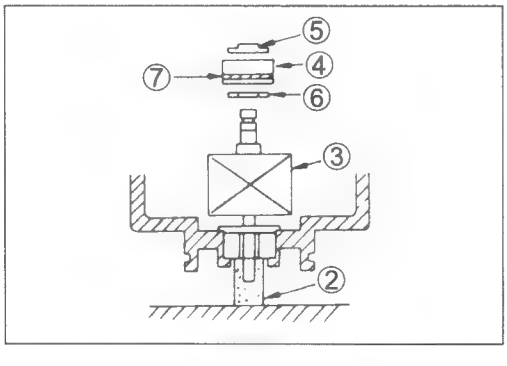

NOTE:
Before reinstalling the slip ring side bearing onto the generator end housing, turn the expander ring and align the expander ring lug with the center of the chamfered edge of the bearing outer race.

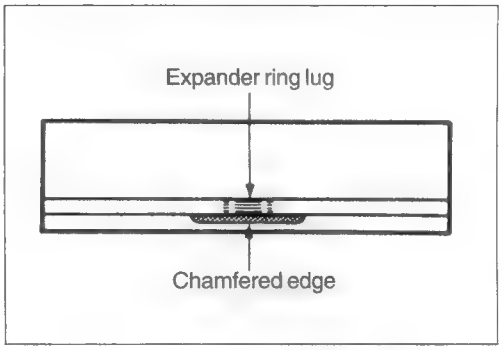

- Tighten the generator housing nuts ① to the specified torque.

Generator housing nut: 4.5 N·m (0.45 kgf·m, 3.5 lb-ft)

- Tighten the generator driven gear nut to the specified torque.

Generator driven gear nut: 55 N·m (5.5 kgf·m, 40.0 lb-ft)

NOTE:
After tightening the generator driven gear nut to the specified torque, stake the nut using a punch.

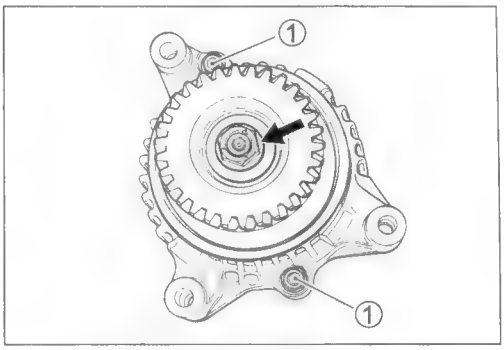

- Tighten the generator mounting bolts to the specified torque.

Generator mounting bolt: 25 N·m (2.5 kgf·m, 18.0 lb-ft)

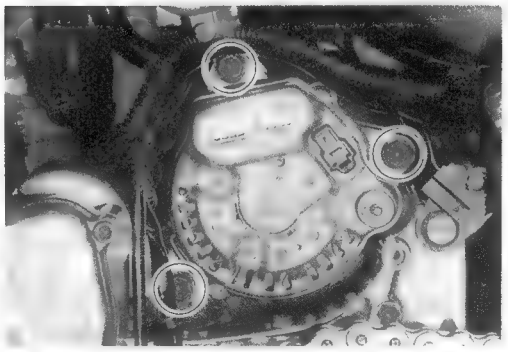

- After mounting the generator, route the wire harness properly. (☞7-14)
- Remount the engine sprocket cover. (☞3-10)

STARTER SYSTEM AND SIDE-STAND IGNITION INTERLOCK SYSTEM

STARTER SYSTEM DESCRIPTION

The starter system consists of the following components: the starter motor, starter relay, clutch lever position switch, turn signal/side-stand relay, side-stand switch, gear position switch, starter button, engine stop switch, ignition switch and battery. Pressing the starter button (on the right handlebar switch) energizes the starter relay, causing the contact points to close, thus completing the circuit from the starter motor to the battery. The starter motor draws about 80 amperes to start the engine.

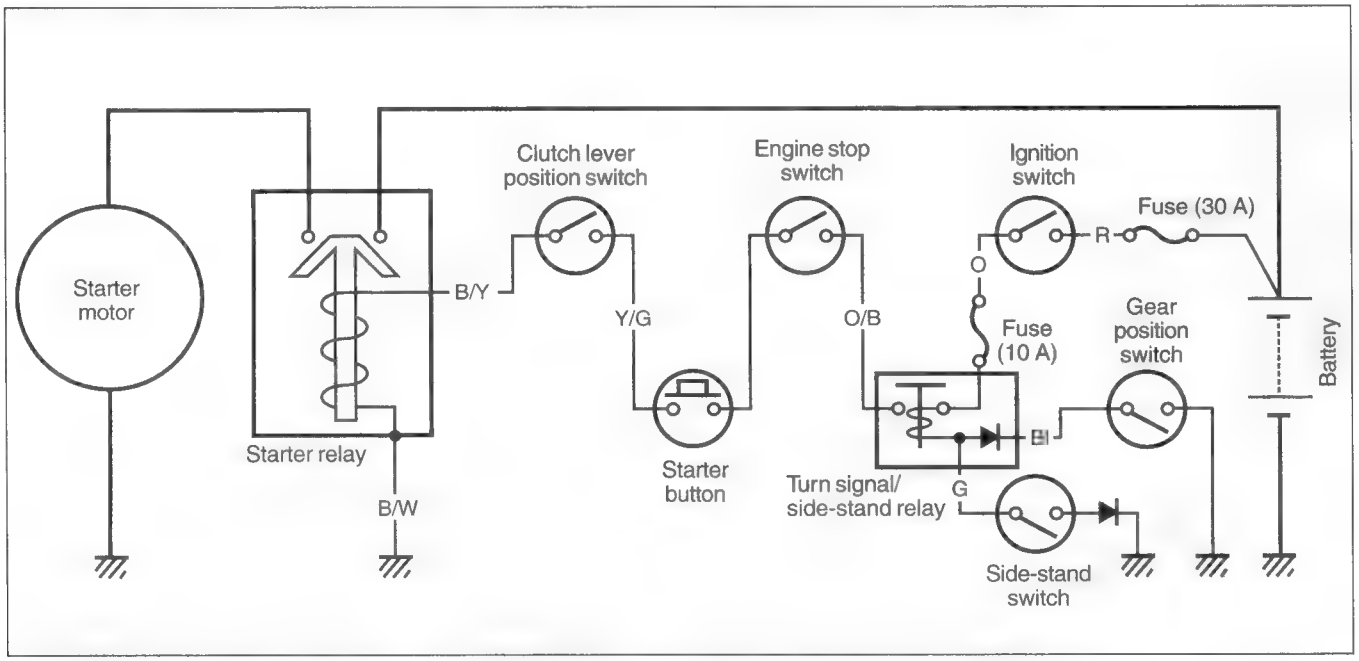

SIDE-STAND/IGNITION INTERLOCK SYSTEM DESCRIPTION

This side-stand/ignition interlock system prevents the motorcycle from being started with the side-stand down. The system is operated by an electric circuit provided between the battery and ignition coil.

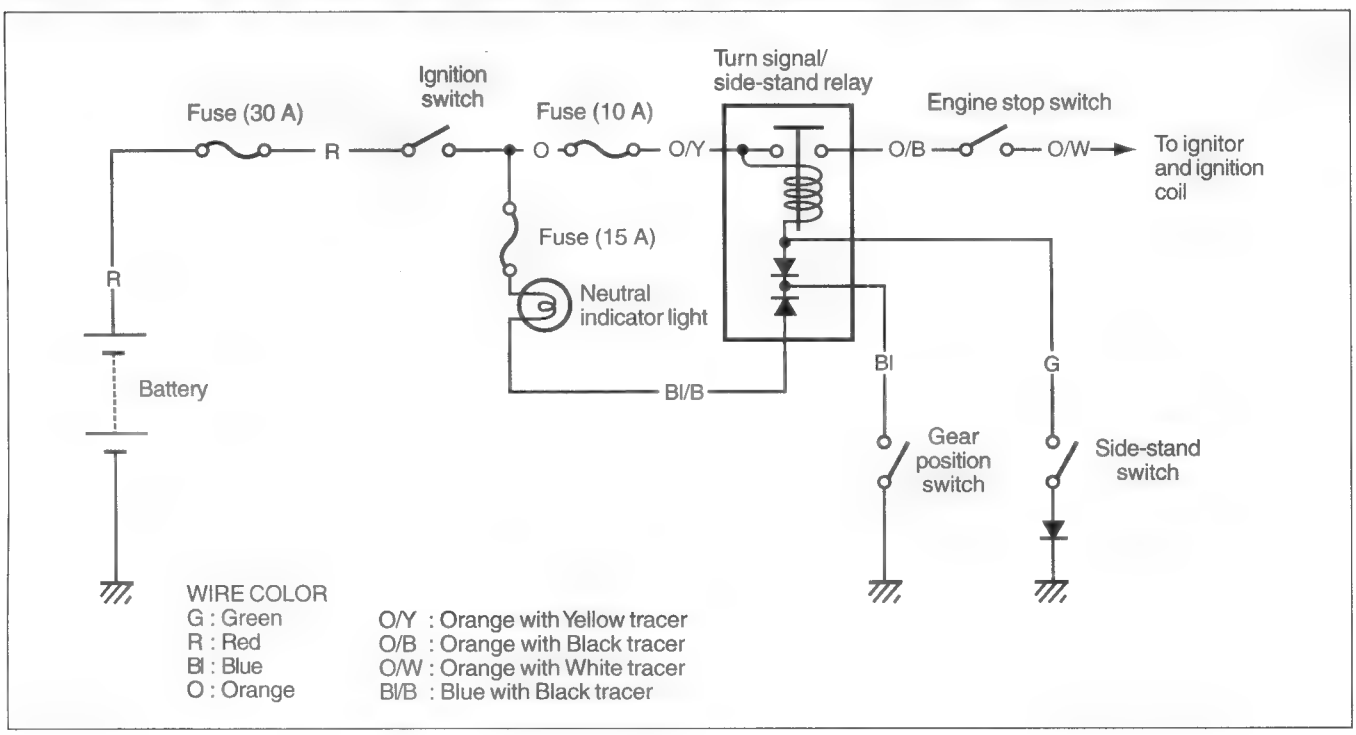

The circuit consists of the turn signal/side-stand relay, neutral indicator light and switches. The ignition coils will send voltage to the spark plugs dependant on what gear the transmission is in and whether the side-stand is either up or down. The gear position and side-stand switches work together in this system. The ignition coils work only in two situations as follows.

1. Transmission: Neutral (ON) Side-stand: Down (OFF)
   The current flow Ⓐ switches "on" the side-stand relay and the ignition coils send voltage to the spark plugs even when the side-stand is kept down.

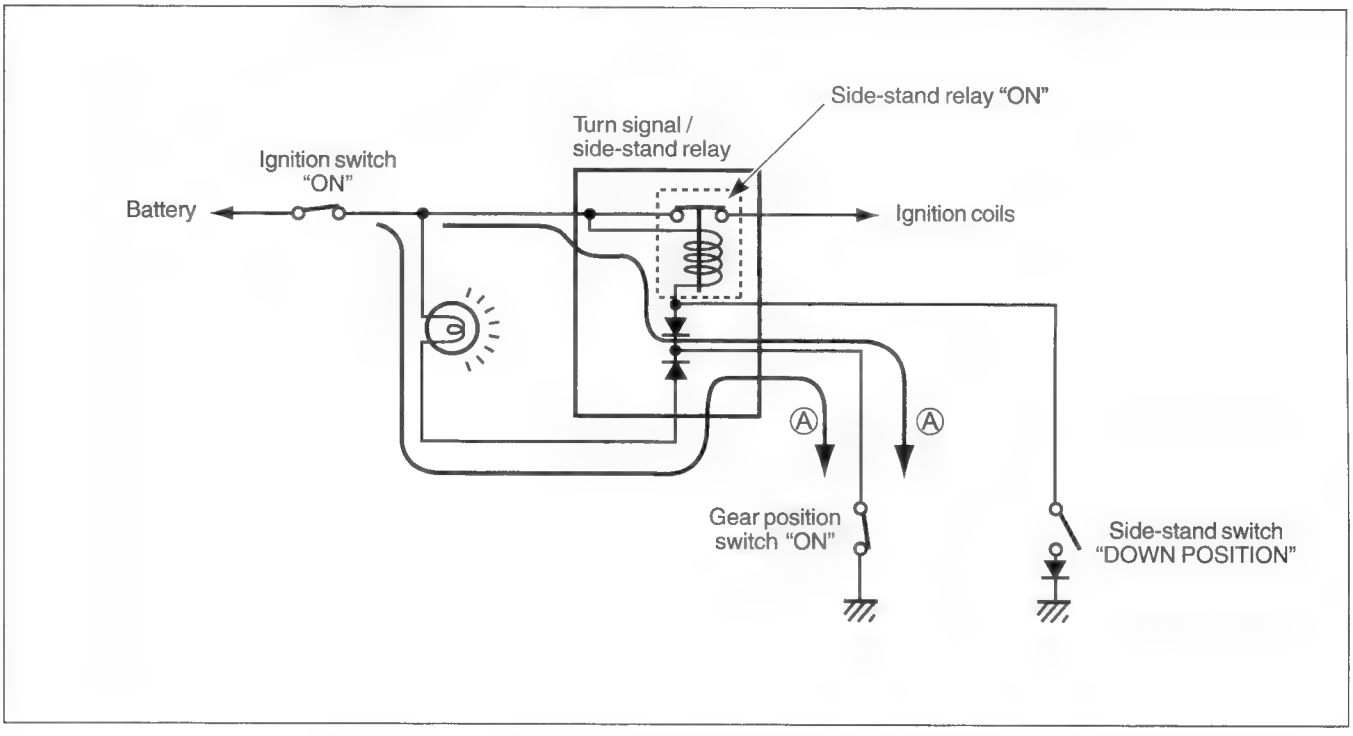

2. Side-stand: Up (ON)
   The current flow Ⓑ switches "on" the side-stand relay and the ignition coils send voltage to the spark plugs. The engine can be started in any gear.

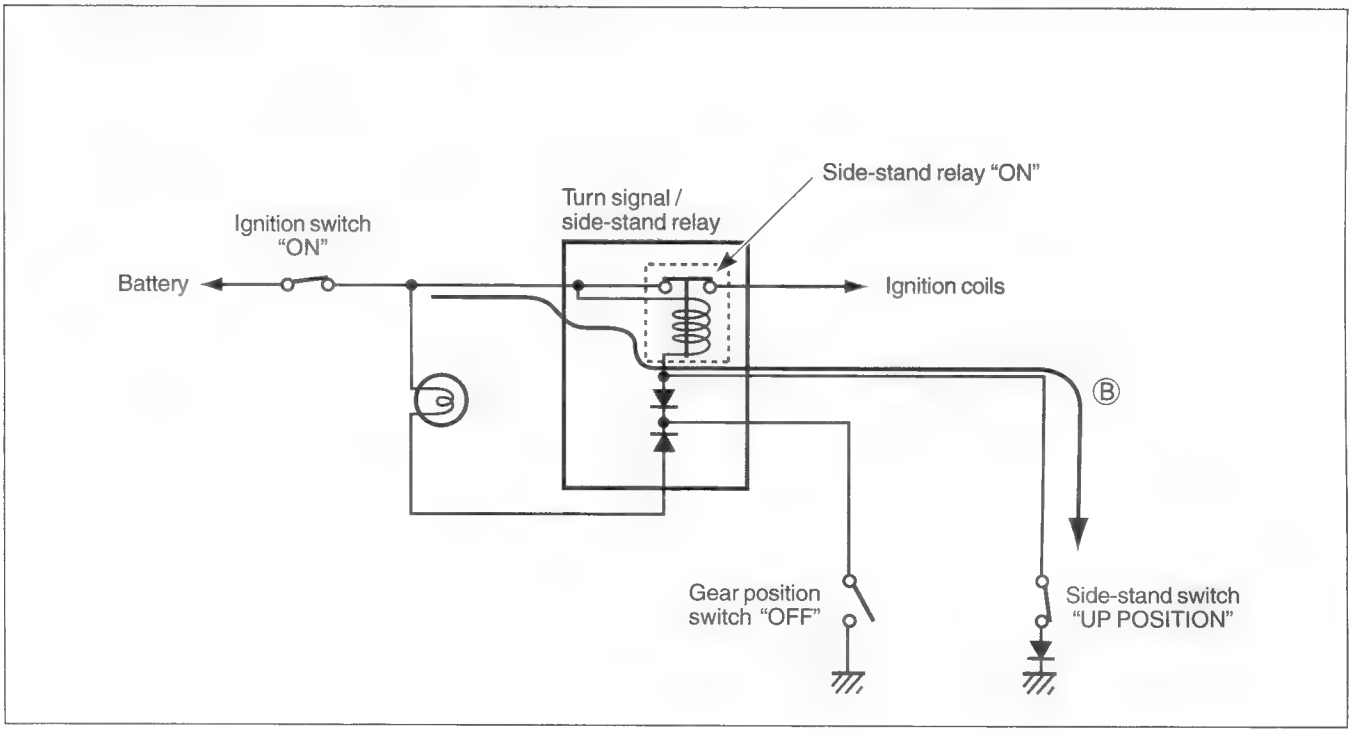

TROUBLE SHOOTING

Starter motor will not run.

The transmission is in neutral. Grasp the clutch lever. Turn on the ignition switch with the engine stop switch in the "RUN" position. Listen for a click from the starter relay when the starter button is pushed.

— Clicks → Check if the starter motor runs when its terminal is connected to the battery ⊕ terminal (Do not use a thin "wire" because a large amount of current flows.)

- Runs → • Faulty starter relay
  • Loose or disconnected starter motor lead wire
- Dose not run → • Faulty starter motor

No click

Measure the starter relay voltage at the starter relay connectors (between B/Y ⊕ and B/W ⊖) when the starter button is pushed.

— No Voltage →
- Faulty ignition switch
- Faulty engine stop switch
- Faulty clutch lever position switch
- Faulty gear position switch
- Faulty turn signal/side-stand relay
- Faulty starter button
- Poor contact of connector
- Open circuit in wire harness

Voltage

Check the starter relay. (☞6-23)

— No good → • Faulty starter relay

OK → • Poor contact of the starter relay

The starter motor runs when the transmission is in neutral, but does not run when the transmission is in any position other than neutral, with the side-stand up.

Check the side-stand switch. (☞6-25)

— No good → • Faulty side-stand switch

OK → • Open circuit in wire harness
• Poor contact of connector

Others

Engine does not turn though the starter motor runs.	• Faulty side-stand switch

STARTER MOTOR REMOVAL AND DISASSEMBLY

- Remove the starter motor. (☞3-16)

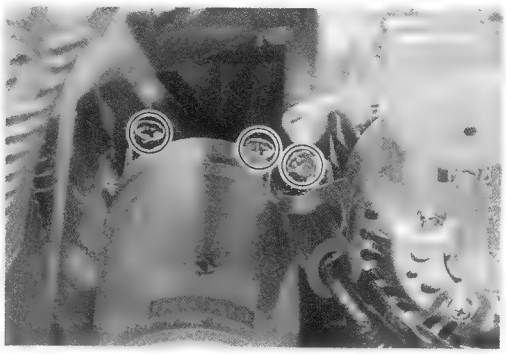

- Disassemble the starter motor, as shown.

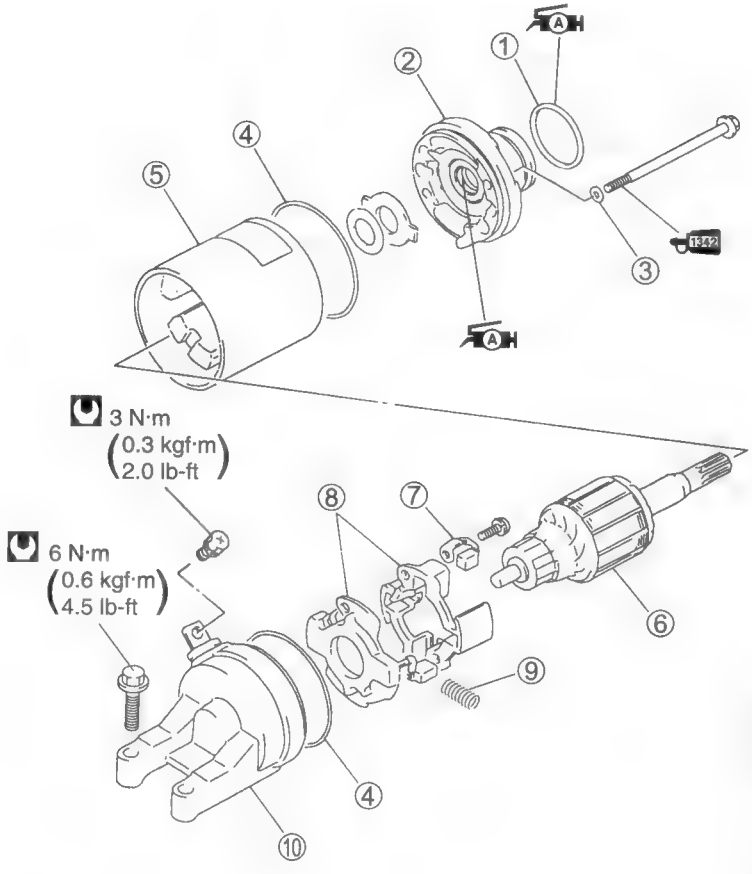

① O-ring
② Housing end (inside)
③ O-ring (2 pcs)
④ O-ring (2 pcs)
⑤ Starter motor case
⑥ Armature
⑦ Brush (2 pcs)
⑧ Brush holder
⑨ Brush spring (4 pcs)
⑩ Housing end (outside)

STARTER MOTOR INSPECTION

CARBON BRUSHES

Inspect the carbon brushes for abnormal wear, cracks or smoothness in the brush holder.

If either carbon brush is defective, replace the brush assembly.

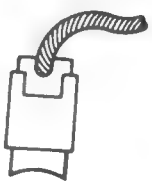

COMMUTATOR

Inspect the commutator for discoloration, abnormal wear or undercut Ⓐ.
If the commutator is abnormally worn, replace the armature.
If the commutator surface is discolored, polish it with #400 sandpaper and wipe it using a clean, dry cloth.
If there is no undercut, scrape out the insulator ① with a saw blade.

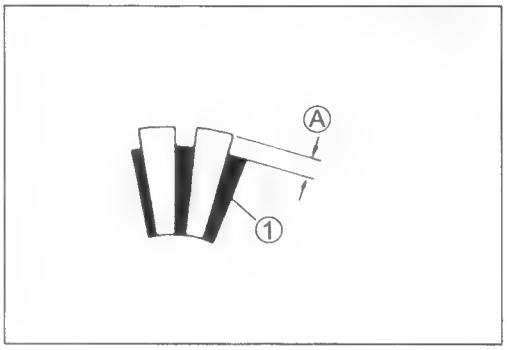

ARMATURE COIL INSPECTION

Measure for continuity between each segment.
Measure for continuity between each segment and the armature shaft.
If there is no continuity between the segments or there is continuity between the segments and shaft, replace the armature with a new one.

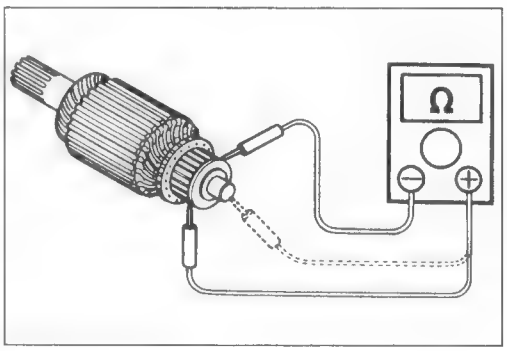

OIL SEAL INSPECTION

Check the seal lip for damage or leakage.
If any damage is found, replace the housing end (inside).

STARTER MOTOR REASSEMBLY AND REMOUNTING

Reassemble and remount the starter motor in the reverse order of removal and disassembly. Pay attention to the following points:

⚠ CAUTION

Replace the O-rings with new ones to prevent oil leakage and moisture.

- Apply SUZUKI SUPER GREASE "A" to the lip of the oil seal.

For USA

99000-25030: SUZUKI SUPER GREASE "A"

For the other countries

99000-25010: SUZUKI SUPER GREASE "A"

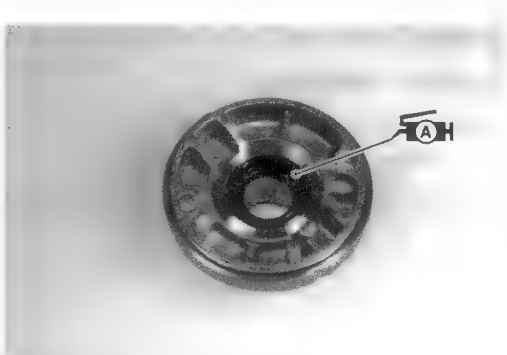

- Apply a small quantity of SUZUKI MOLY PASTE to the armature shaft.

99000-25140: SUZUKI MOLY PASTE

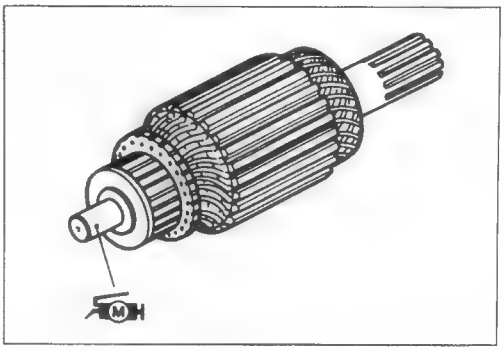

- Install the brush holder as shown.

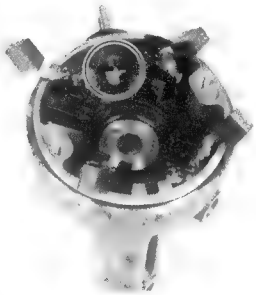

- Align the match marks on the starter motor case with the match mark on the housing end.
- Apply a small quantity of THREAD LOCK "1342" to the starter motor housing bolts.

99000-32050: THREAD LOCK "1342"

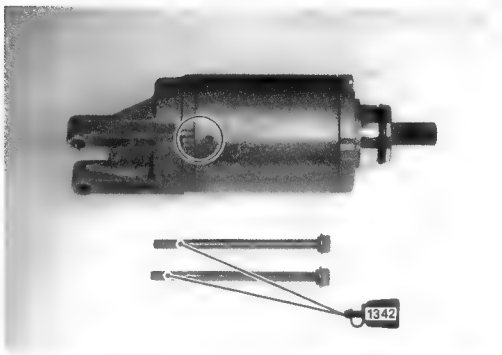

- Install the starter motor. (☞3-38)

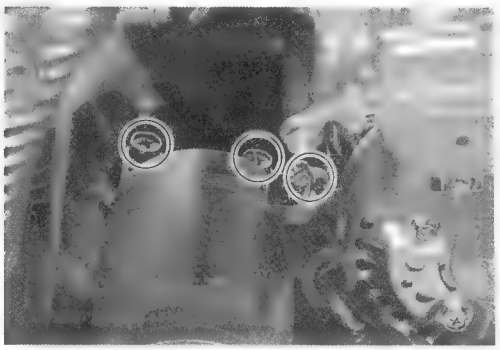

STARTER RELAY INSPECTION

- Remove the side frame cover (left side). (☞5-6)
- Disconnect the battery ⊖ lead wire and starter relay cover ①.

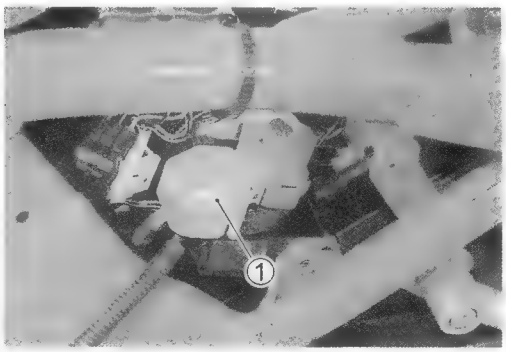

- Disconnect the starter motor lead wire ①, battery lead wire ② and starter relay coupler ③ at the starter relay.
- Remove the starter relay.

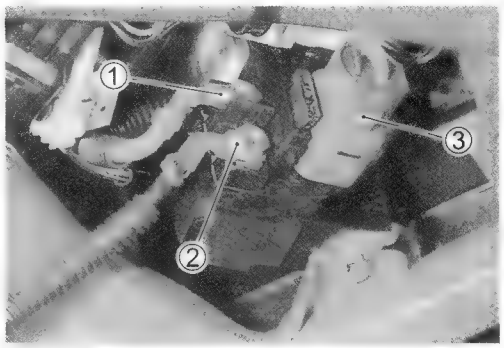

Apply 12 volts to terminals Ⓐ and Ⓑ and measure for continuity between the positive and negative terminals.
If the starter relay clicks and continuity is found, the relay is ok.

TOOL 09900-25008: Multi circuit tester set

Tester knob indication: Continuity test (•))))

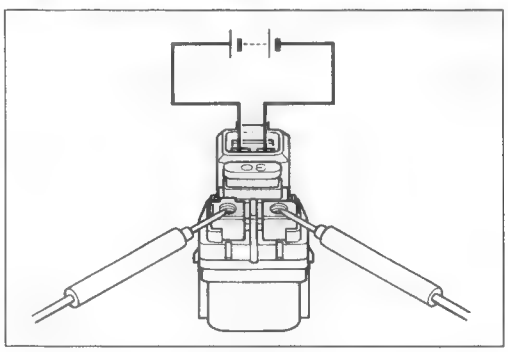

⚠ CAUTION

Do not apply battery voltage to the starter relay for more than five seconds.
This may overheat and damage the relay coil.

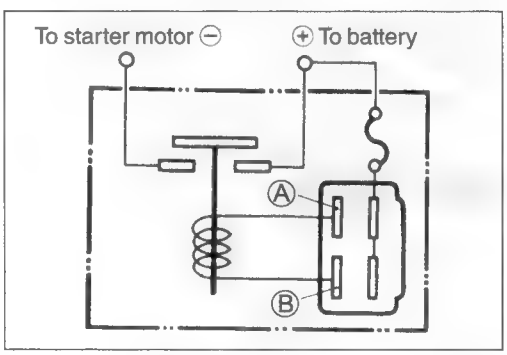

Check the relay coil for opens, grounds and the specified resistance.

DATA Starter relay resistance
Standard: 3 – 6 Ω

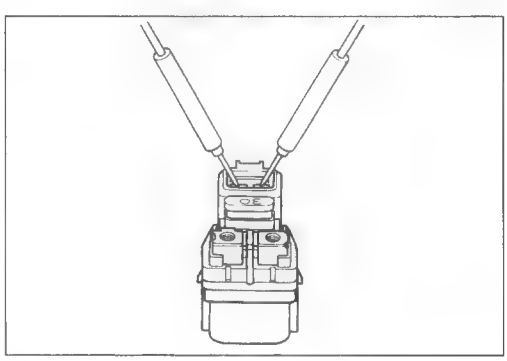

SIDE-STAND/IGNITION INTERLOCK SYSTEM PART INSPECTION

If the interlock system does not operate properly, check each component. If any abnormality is found, replace the component with a new one.

GEAR POSITION SWITCH

The gear position switch coupler is located behind the side frame cover (left side).

- Remove the side frame cover (left side). (☞5-6)
- Disconnect the gear position switch coupler and measure the continuity between Blue and Ground with the transmission in neutral.

	Blue	Ground
ON (in neutral)	○	○
OFF (not in neutral)		

TOOL 09900-25008: Multi circuit tester set

Tester knob indication: Continuity test (•))))

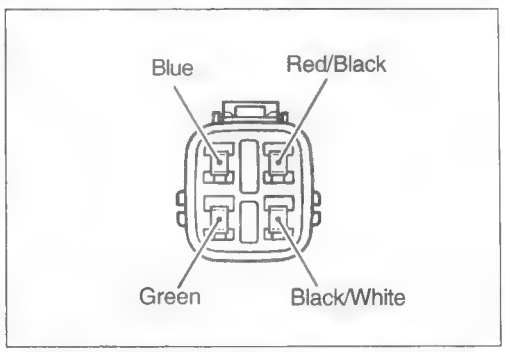

SIDE-STAND SWITCH

The side-stand switch coupler is located behind the side frame cover (left side).

- Remove the side frame cover (left side). (☞5-6)
- Disconnect the side-stand switch coupler and measure the voltage between Green and Black/White lead wires.

TOOL 09900-25008: Multi circuit tester set

Tester knob indication: Diode test (→|)

	Green (⊕ probe)	Black/White (⊖ probe)
ON (side-stand up)	0.4 – 0.6 V	
OFF (side-stand down)	1.4 – 1.5 V	

NOTE:
If the tester reads under 1.4 V, replace its battery when the tester probes are not connected.

TURN SIGNAL/SIDE-STAND RELAY

The turn signal/side-stand relay, which is located under the seat, is composed of the turn signal relay, and the side-stand relay and diode.

- Remove the seat. (☞5-5)

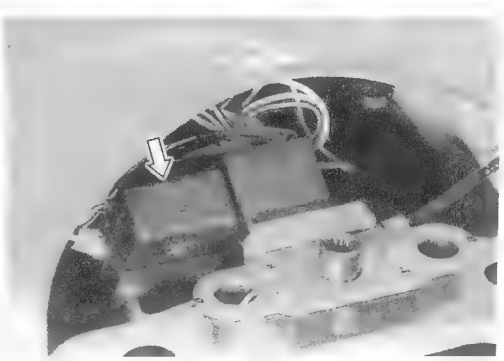

SIDE-STAND RELAY INSPECTION

First check the insulation between Ⓓ and Ⓔ terminals with the tester. Then apply 12 V to terminals Ⓓ and Ⓒ (⊕ to Ⓓ and ⊖ to Ⓒ) and check the continuity between Ⓓ and Ⓔ. If there is no continuity, replace the turn signal/side-stand relay with a new one.

09900-25008: Multi circuit tester set

Tester knob indication: Continuity test (•))))

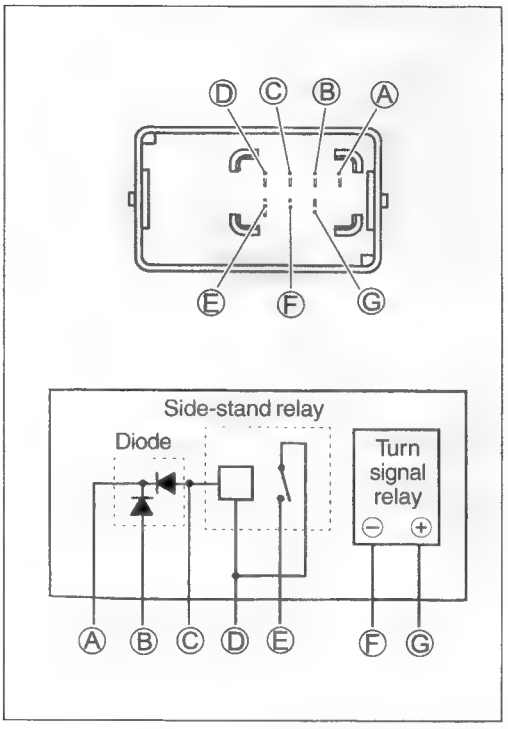

DIODE INSPECTION

Measure the voltage between the terminals using the multi circuit tester. Refer to the following table.

Unit: V

⊖ Probe of tester to:	⊕ Probe of tester to:		
	Ⓒ, Ⓑ	Ⓐ
Ⓒ, Ⓑ		1.4 – 1.5
Ⓐ	0.4 – 0.6	

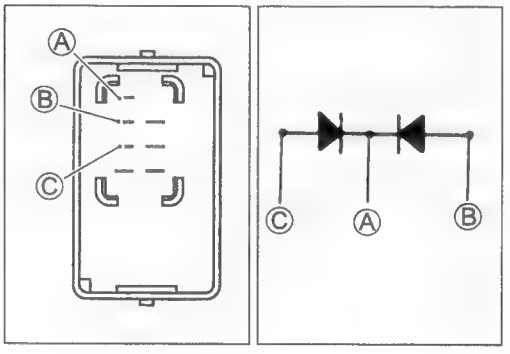

09900-25008: Multi circuit tester set

Tester knob indication: Diode test (→|)

NOTE:

If the multi circuit tester reads under 1.4 V, replace its battery when the tester probes are not connected.

IGNITION SYSTEM (DIGITAL IGNITOR)

DESCRIPTION

The fully transistorized ignition system consists of the following components: a signal generator (which is made up of the signal generator rotor and pickup coil), ignitor (including a 8-bit microcomputer and a 10 MHz ceramic vibrator), throttle position sensor, two ignition coils and four spark plugs. The ignition timing is programmed and stored in the ignitor's ROM (Read Only Memory).

The signal generator is mounted on the right end of the crankshaft. The induced signal in the signal generator is sent to the wave-form arrangement circuit and the CPU receives this signal and calculates the best ignition timing from the signal of the ceramic vibrator, throttle position sensed by throttle position sensor and data stored in the ROM. The CPU outputs the signal to the transistor of the ignition coil output circuit which is connected to the primary windings of the ignition coils which is turned "off" and "on" accordingly. Thus, it induces the secondary current in the ignition coil's secondary windings and produces the spark between the spark plug gaps.

The ignition cutoff circuit is incorporated in the ignitor to prevent the engine from overreving. If the engine speed reaches 12 000 r/min, this circuit will cutoff the ignition primary current for the #1 and #4 spark plugs.

⚠ CAUTION

The engine is capable of running at over 12 000 r/min without a load, even if the ignition cutoff circuit is in effect; however, this may cause engine damage. Therefore, never run the engine over 12 000 r/min without a load.

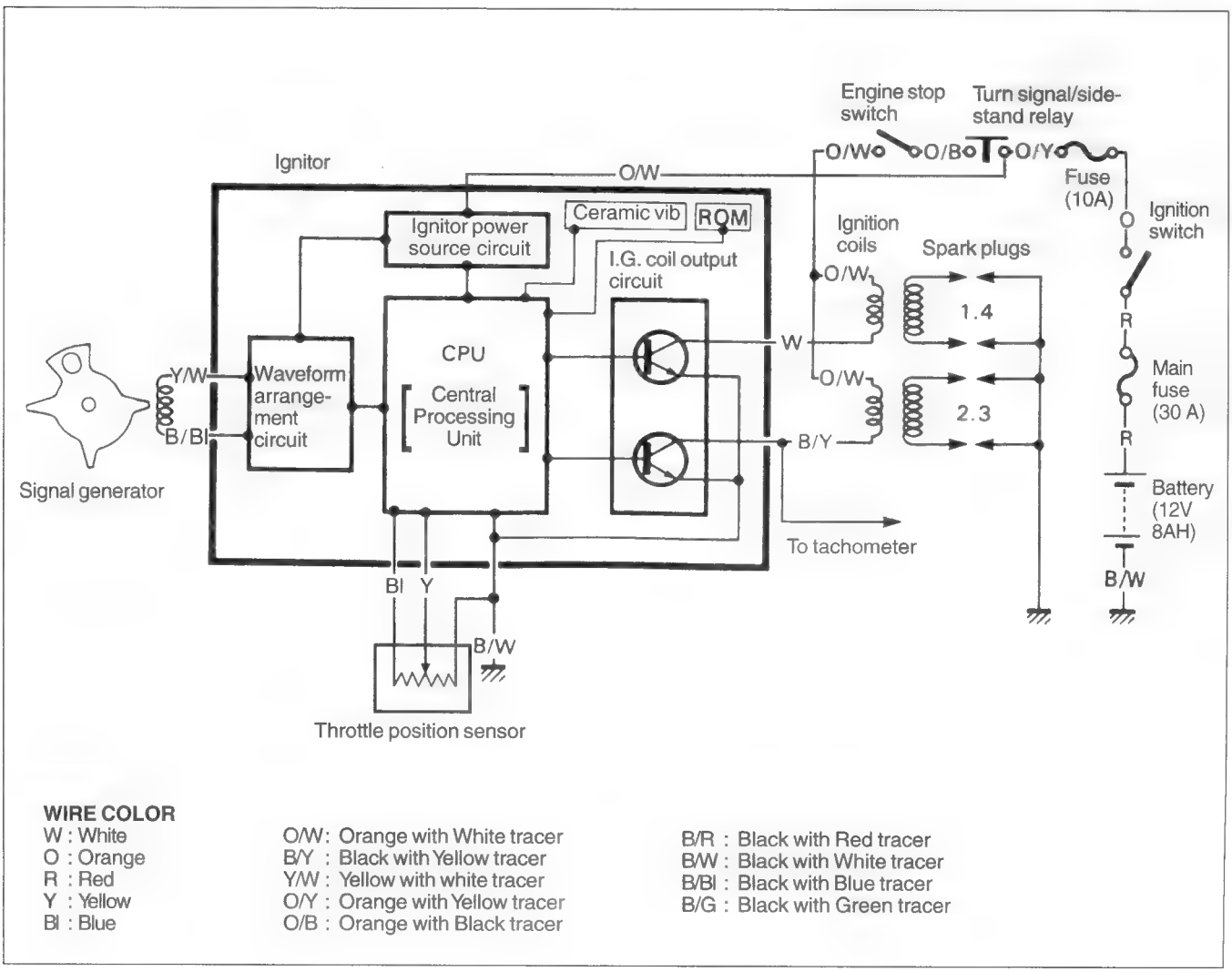

WIRE COLOR

W : White	O/W: Orange with White tracer	B/R : Black with Red tracer
O : Orange	B/Y : Black with Yellow tracer	B/W : Black with White tracer
R : Red	Y/W : Yellow with white tracer	B/Bl : Black with Blue tracer
Y : Yellow	O/Y : Orange with Yellow tracer	B/G : Black with Green tracer
Bl : Blue	O/B : Orange with Black tracer	

TROUBLE SHOOTING

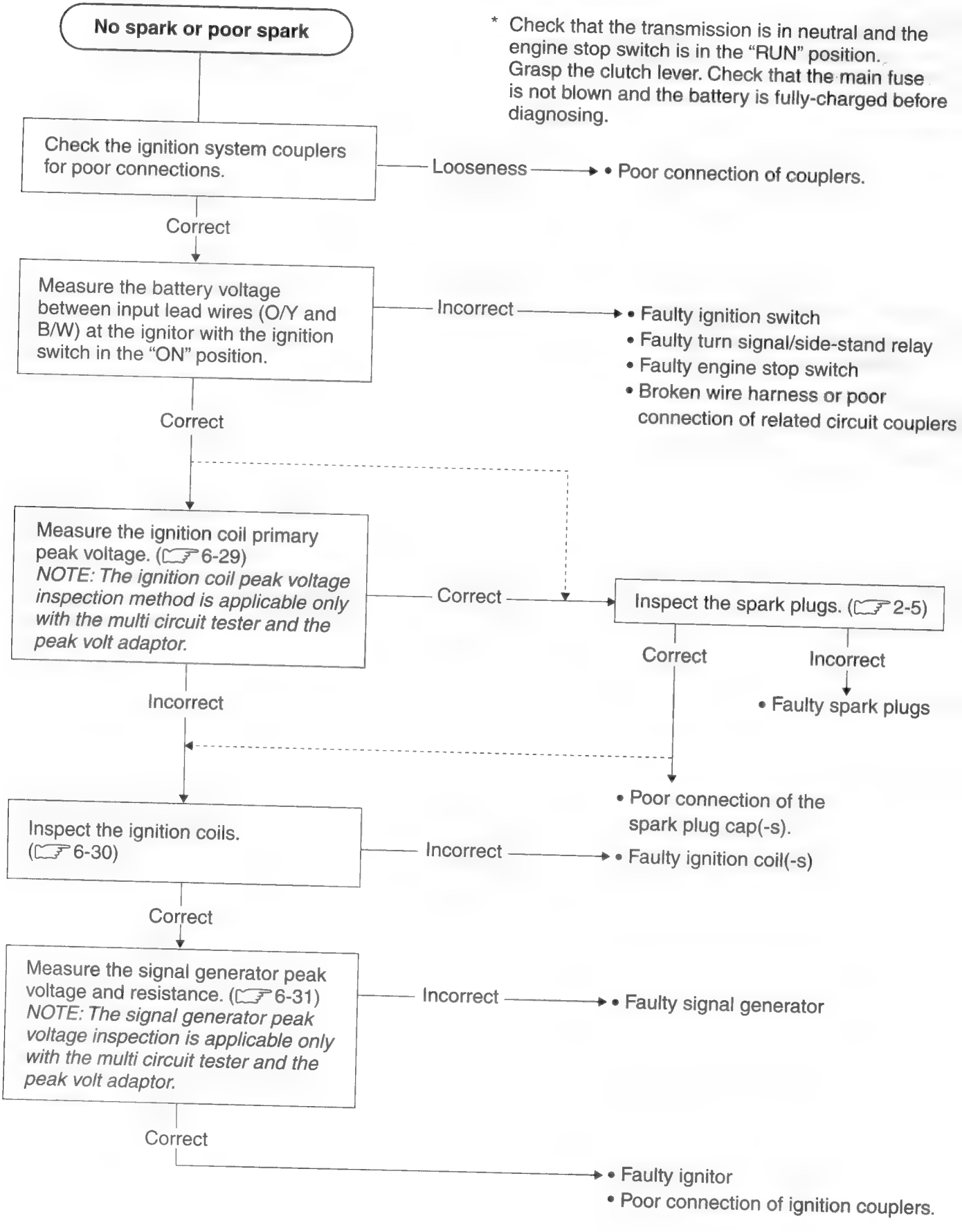

INSPECTION

IGNITION COIL PRIMARY PEAK VOLTAGE

- Remove the fuel tank. (☞4-3)
- Remove all of the spark plug caps and spark plugs.
- Connect four new spark plugs to each spark plug cap and ground them to the crankcase.

NOTE:
Make sure that all of the spark plug caps and spark plugs are connected properly and the battery is fully-charged.

Measure ignition coil primary peak voltage (for #1 and #4 cylinders) in the following procedure.

- Connect the multi circuit tester with the peak voltage adaptor as follows.

Ignition coil (for #1 and #4 cylinders):
White terminal–Ground
(⊕ Probe) (⊖ Probe)

NOTE:
Do not disconnect the ignition coil primary wire.

TOOL 09900-25008: Multi circuit tester set

⚠ CAUTION

When using the multi circuit tester and peak volt adaptor, refer to the appropriate instruction manual.

- Shift the transmission into neutral, turn the ignition switch to the "ON" position and grasp the clutch lever.
- Press the starter button and allow the engine to crank for a few seconds, and then measure the ignition coil primary peak voltage.
- Repeat the above procedure a few times and measure the highest ignition coil primary peak voltage.

Tester knob indication: Voltage (⎓)

DATA Ignition coil primary peak voltage: More than 140 V

⚠ WARNING

While testing, do not touch the tester probes and spark plugs to prevent receiving an electric shock.

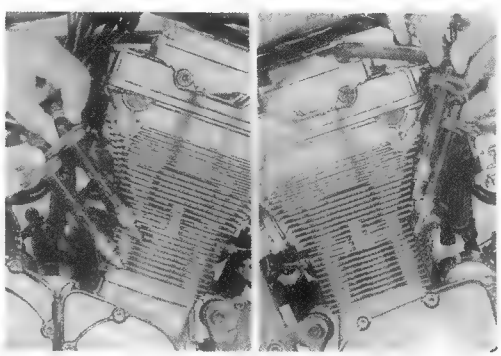

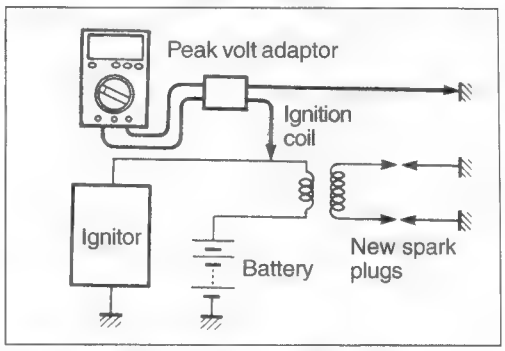

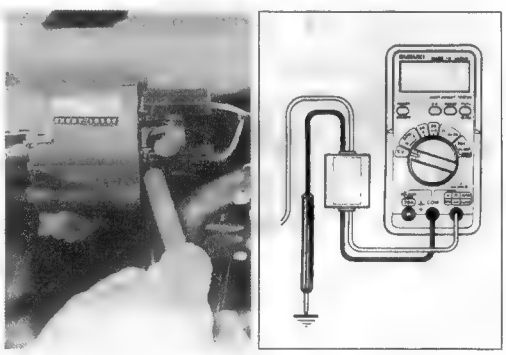

Measure ignition coil primary peak voltage (for #2 and #3 cylinders) in the same manner as for cylinders #1 and #4.
Ignition coil (for #2 and #3 cylinders):

B/Y terminal – Ground
(⊕ Probe) (⊖ Probe)
B/Y: Black with Yellow tracer

NOTE:
Do not disconnect the ignition coil primary wire.

Tester knob indication: Voltage (⎓)

DATA Ignition coil primary peak voltage: More than 140 V

If the voltages are lower than the standard values, inspect the ignition coil and the signal generator.

IGNITION COIL RESISTANCE

- Measure the ignition coil resistance in both the primary and secondary windings. If the windings are in sound condition, their resistance should be close to the specified values.

DATA Ignition coil resistance
Primary: Approx. 2 – 4 Ω (⊕ tap – ⊖ tap)
Secondary: Approx. 30 – 40 kΩ
(spark plug cap – spark plug cap)

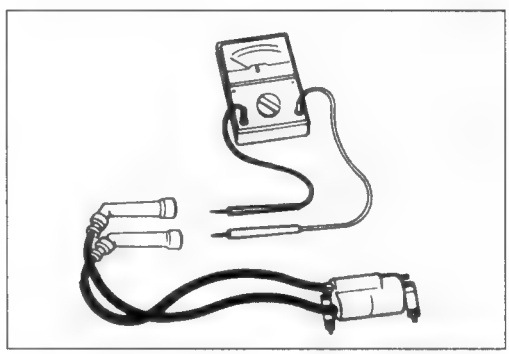

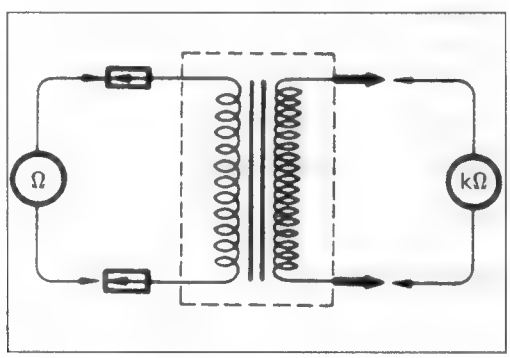

SIGNAL GENERATOR PEAK VOLTAGE

- Remove the frame cover. (☞5-5)
- Remove the side frame cover (left side). (☞5-6)

NOTE:
Make sure that all of the couplers are connected properly and the battery is fully-charged.

- Disconnect the ignitor coupler ① at the ignitor.
  Measure the signal generator peak voltage between the Yellow/White and Black/Blue lead wires on the ignitor coupler.
- Connect the multi circuit tester with the peak volt adaptor as follows.

Black/Blue (⊕ Probe) – Yellow/White (⊖ Probe)

TOOL 09900-25008: Multi circuit tester set

⚠ CAUTION

When using the multi circuit tester and peak volt adaptor, refer to the appropriate instruction manual.

- Shift the transmission into neutral, turn the ignition switch to the "ON" position and grasp the clutch lever.
- Press the starter button and allow the engine to crank for a few seconds, and then measure the signal generator peak voltage.
- Repeat the above procedure a few times and measure the highest signal generator peak voltage.

Tester knob indication: Voltage (⎓)

DATA Signal generator peak voltage:
More than 1.0 V (Black/Blue – Yellow)

If the peak voltage measured on the ignitor coupler is lower than the standard value, measure the peak voltage on the signal generator coupler as follows.

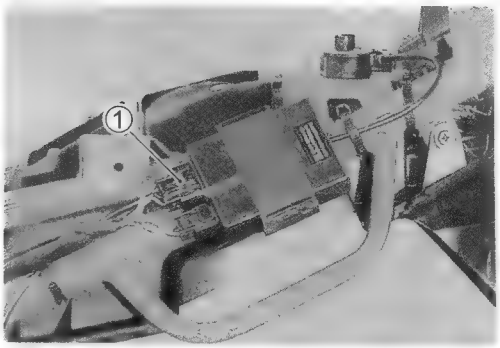

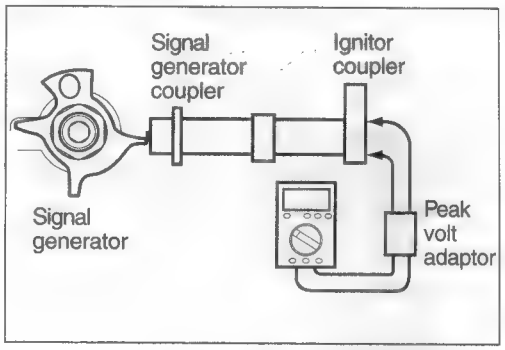

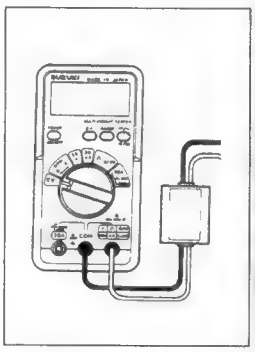

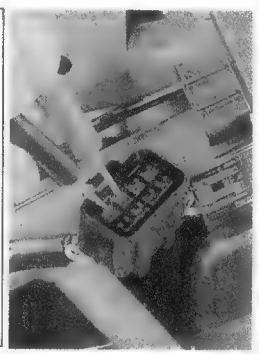

- Remove the side frame cover (left side). (☞5-6)
- Disconnect the signal generator coupler and connect the multi circuit tester with the peak volt adaptor.

Blue terminal – Yellow terminal
(⊕ Probe) (⊖ Probe)

- Measure the signal generator peak voltage in the same manner as on the ignitor coupler.

Tester knob indication: Voltage (⎓)

DATA Signal generator peak voltage:
More than 1.0 V (Blue – Yellow)

If the peak voltage on the signal generator lead wire couplers is within specification, but on the ignitor coupler is out of specification, the wire harness must be replaced. If both peak voltages are out of specification, the signal generator must be replaced and re-checked.

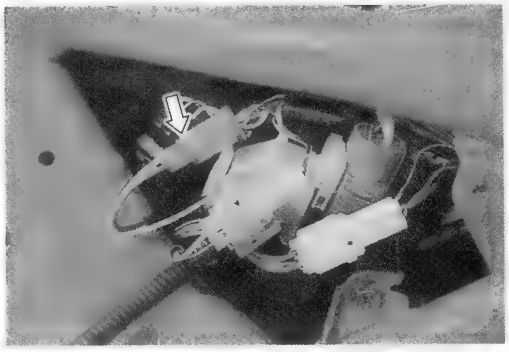

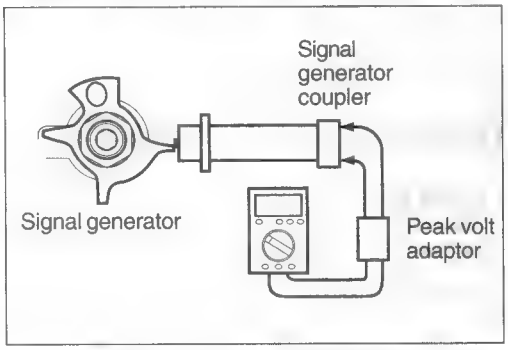

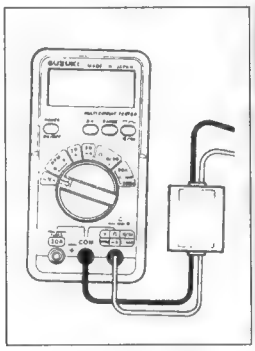

SIGNAL GENERATOR

- Remove the upper fairings and disconnect the signal generator coupler.
- Measure the resistance between the lead wires and ground. If the resistance is not within the specified value, the signal generator stator must be replaced.

DATA Pickup coil resistance:
Approx. 135 – 200 Ω (Yellow – Blue)
∞ Ω (Blue – Ground)

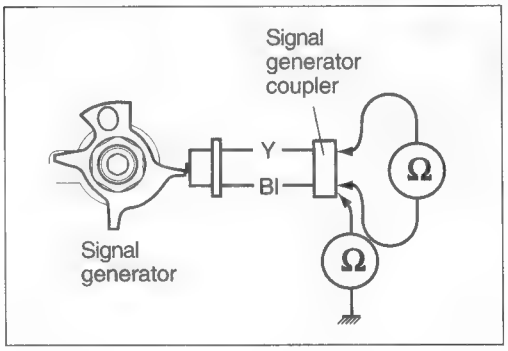

NOTE:
Refer to page 3-16 and 37 for signal generator replacement.

COMBINATION METER

REMOVAL

- Remove the cowling. (☞5-3)
- Remove the headlight assy. (☞5-4)
- Disconnect the combination meter coupler ① and clamps.
- Remove the combination meter mounting nuts ②.

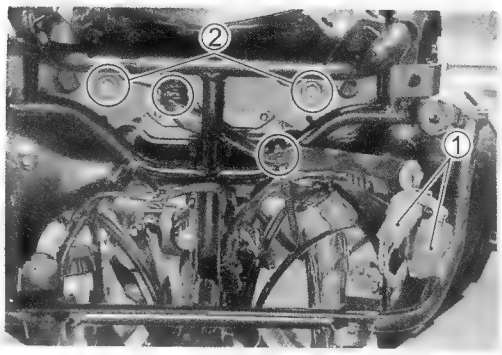

- Remove the combination meter ③.

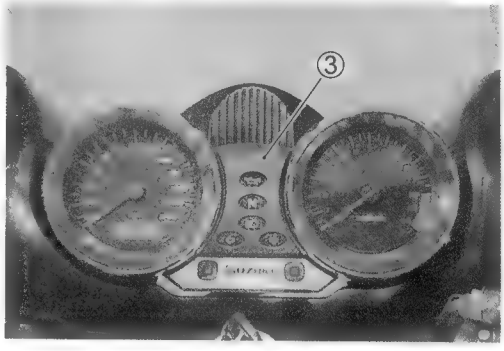

DISASSEMBLY

- Disassemble the combination meter as follows.

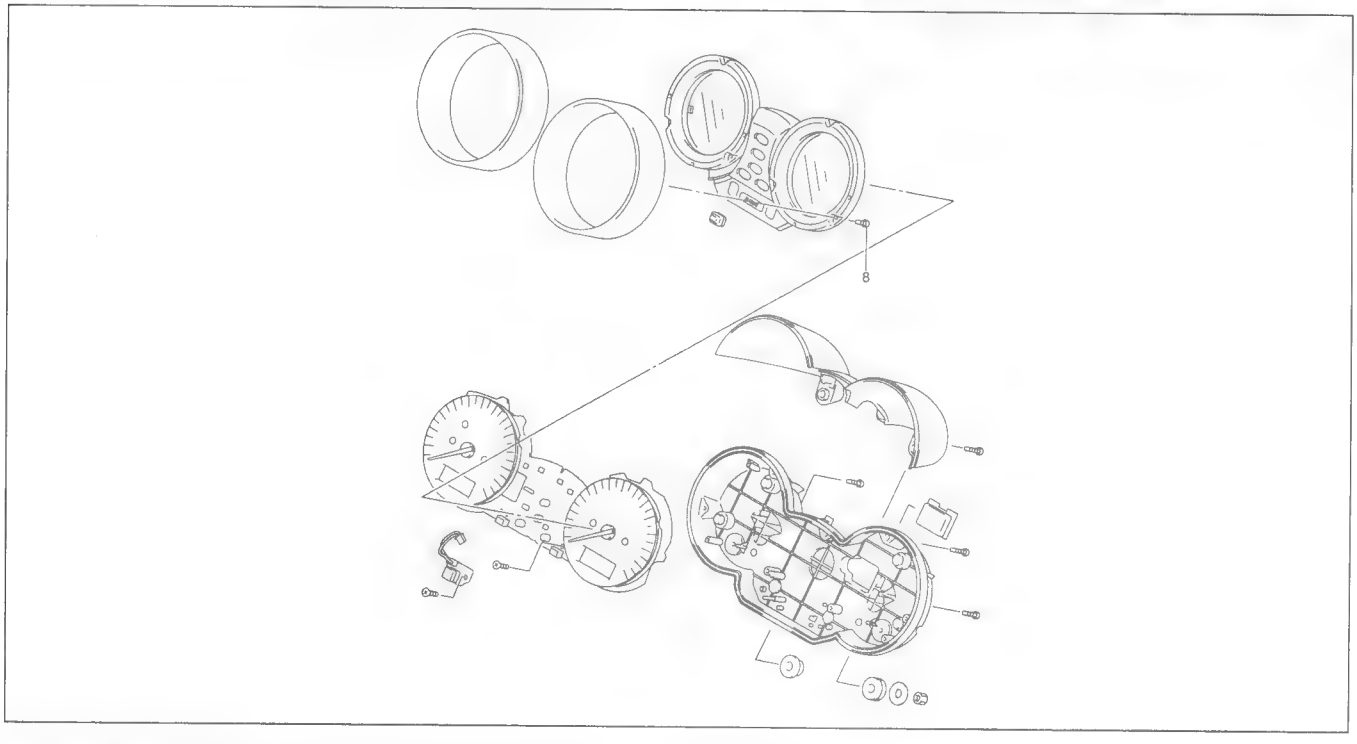

INSPECTION

Measure the continuity between the lead wires in the diagram on the next page using a tester.
If there is no continuity, replace the combination meter assy.

NOTE:
When performing this test, it is not necessary to remove the combination meter.

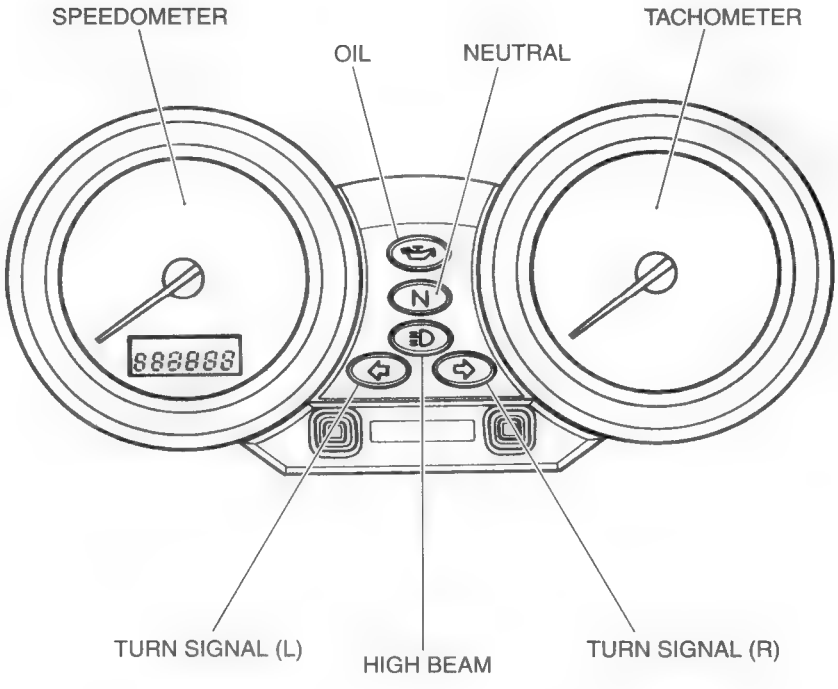

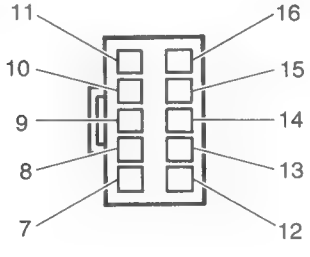

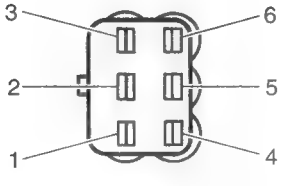

ITEM	⊕ Probe of tester to:	⊖ Probe of tester to:
ILLUMINATION	7	10
TURN (R)	8	10
TURN (L)	13	10
NEUTRAL	14	11
HIGH BEAM	12	10
OIL	14	3

1: SPEEDOMETER
2: TACHOMETER
3: OIL ⊖
4: SPEEDOMETER
5: BATTERY ⊕
6: Blank
7: ILLUMINATION ⊕
8: TURN (R) ⊕
9: Blank
10: GROUND (PILOT LAMP)
11: NEUTRAL ⊖
12: HIGH BEAM ⊕
13: TURN (L) ⊕
14: IGNITION
15: Blank
16: GROUND (TACHOMETER)

SPEEDOMETER INSPECTION

If the speedometer, odometer or tripmeter does not function properly, inspect the speed sensor and the coupler connections. If the speed sensor and coupler connections are OK, replace the combination meter with a new one.

SPEED SENSOR INSPECTION

- Remove the side frame cover (left side). (☞5-6)
- Disconnect the speed sensor coupler.
- Remove the speed sensor ①.

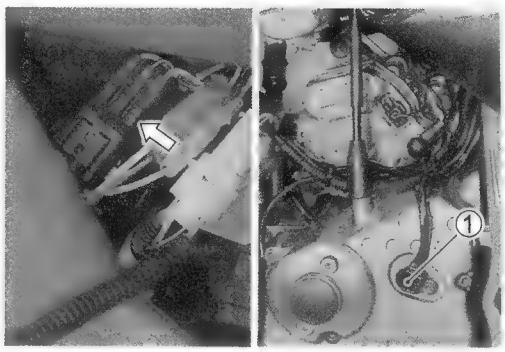

- Connect a 12 V battery (between B and B/W), 10 kΩ resistor (Between B/R and B) and pocket tester (tester ⊕ probe to B and tester ⊖ probe to B/R) as shown.

  B/R : Black with Red tracer
  B/W: Black with White tracer
  B : Black

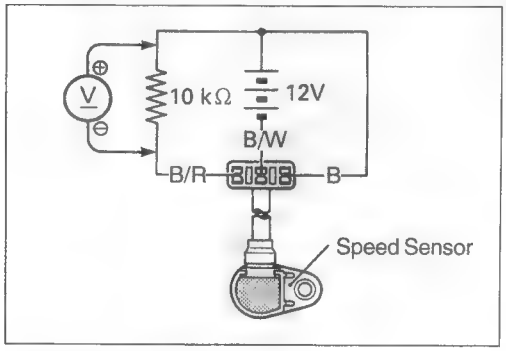

TOOL 09900-25008: Multi circuit tester set

Tester knob indication: Voltage (⎓)

- Move a screwdriver back and forth across the pick-up surface of the speed sensor. The voltage readings should cycle as follows (0 V → 12 V or 12 V → 0 V). If the voltage reading does not change, replace the speed sensor with a new one.

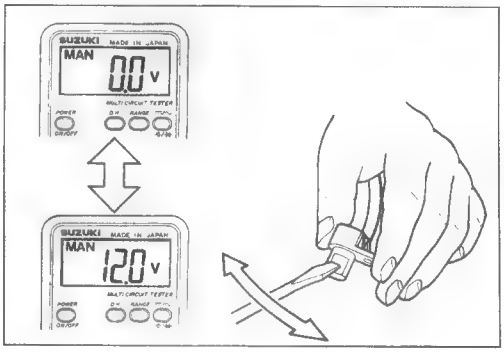

NOTE:
While testing, the highest voltage reading should be the same as the battery voltage (12 V).

OIL PRESSURE INDICATOR INSPECTION

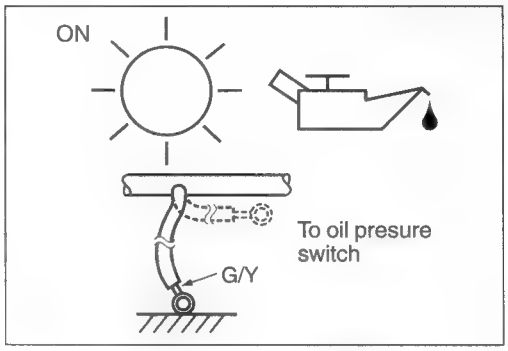

- Remove the signal generator cover. (☞3-13)
- Disconnect the oil pressure Green/Yellow lead wire from the oil pressure switch.
- Turn the ignition switch to the "ON" position.
- Check if the oil pressure indicator lights up when grounding the Green/Yellow lead wire.

If the oil pressure indicator does not light up, check the couplers. If all of the connections are OK, replace the oil pressure indicator with a new one. (☞3-16 and 37)

- After checking the oil pressure indicator light, install the signal generator cover. (☞3-46)

LAMPS

HEADLIGHT

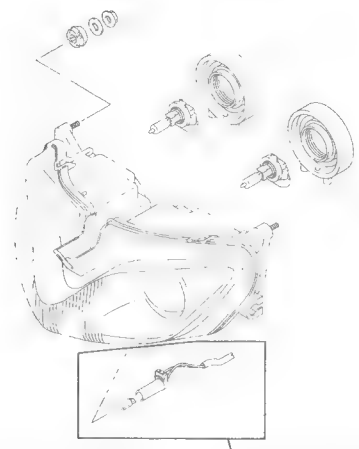

Headlight bulb: 12 V 60 + 51/51 W
Position light bulb: 12 V 5 W (Except for E-03, 28, 33)

NOTE:
Adjust the headlight (vertically and horizontally) after reassembling

BULB REPLACEMENT

- Disconnect the socket ①.
- Turn the bulb ② counterclockwise and remove it.
- Reassemble the bulb in the reverse order of removal.

▲ CAUTION

If you touch the bulb with your bare hands, clean the bulb with a cloth moistened with alcohol or soapy water to prevent premature bulb failure.

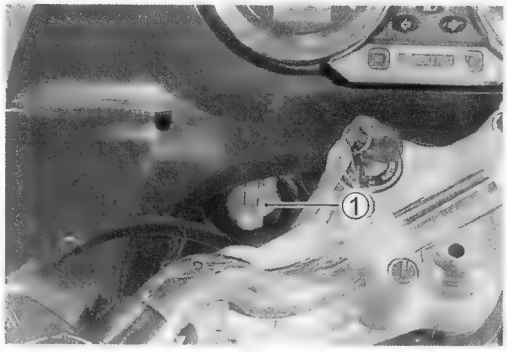

HEADLIGHT BEAM ADJUSTMENT

To adjust the beam horizontally:
Turn the adjuster ① clockwise or counterclockwise.

To adjust the beam vertically:
Turn the adjuster ② clockwise or counterclockwise.

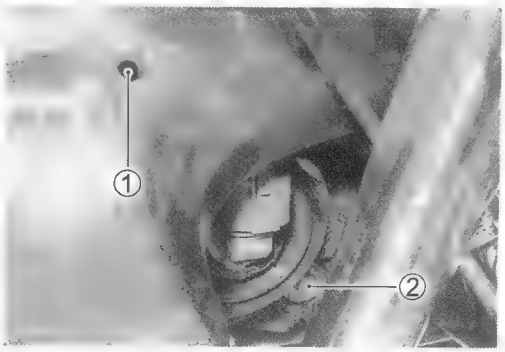

BRAKE LIGHT/TAILLIGHT AND LICENSE PLATE LIGHT

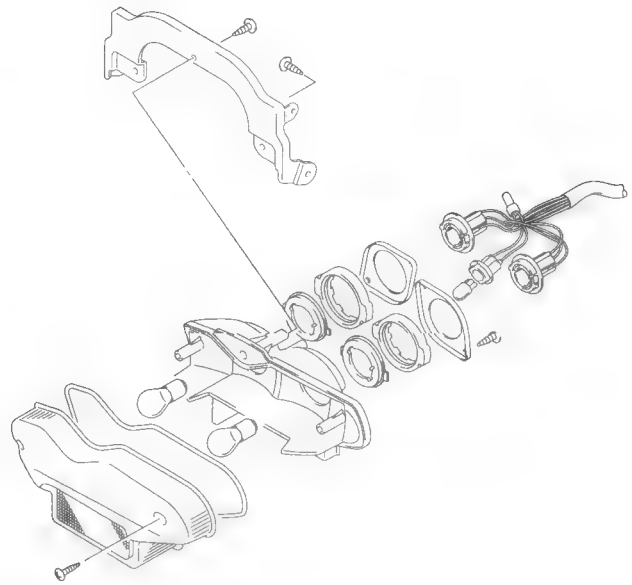

Brake light/taillight bulb: 12 V 21/5 W
License plate bulb: 12 V 5 W

⚠ CAUTION

If you touch the bulb with your bare hands, clean the bulb with a cloth moistened with alcohol or soapy water to prevent premature bulb failure.

TURN SIGNAL LIGHTS

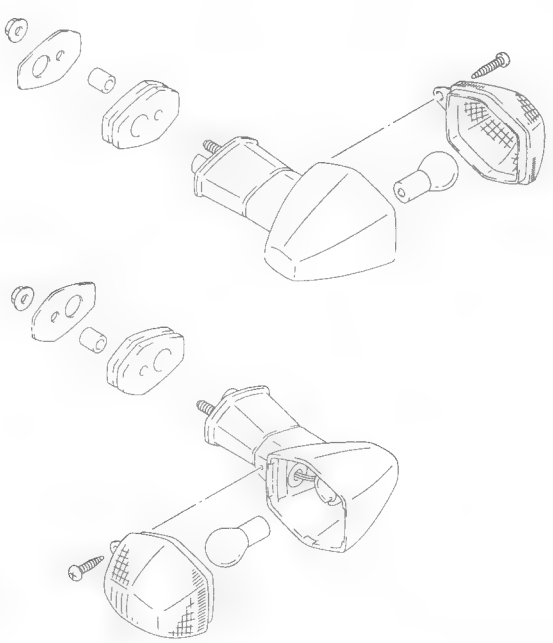

Turn signal light bulb: 12 V 21 W

⚠ CAUTION

Do not overtighten the lens fitting screws.
If you touch the bulb with your bare hands, clean the bulb with a cloth moistened with alcohol or soapy water to prevent premature bulb failure.

RELAYS

STARTER RELAY

The starter relay is located behind the side frame cover (left side). (☞6-23)

TURN SIGNAL/SIDE-STAND RELAY

The turn signal/side-stand relay, which is located under the seat, is composed of the turn signal relay, and the side-stand relay and diode.

- Remove the seat. (☞5-5)

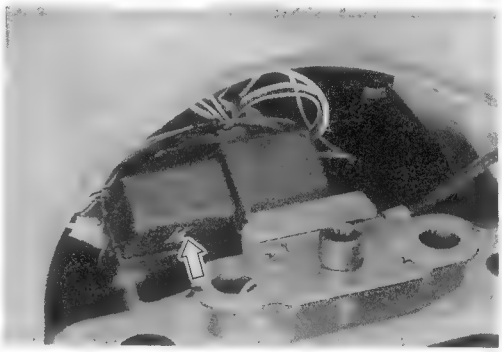

INSPECTION

Before removing the turn signal/side-stand relay, check the operation of the turn signal light.

If the turn signal light does not illuminate, inspect the bulb, turn signal switch and circuit connection.

If the bulb, turn signal switch and circuit connection are OK, the turn signal relay may be faulty; therefore, replace the turn signal/side-stand relay with a new one.

NOTE:

Make sure that the battery is fully charged.

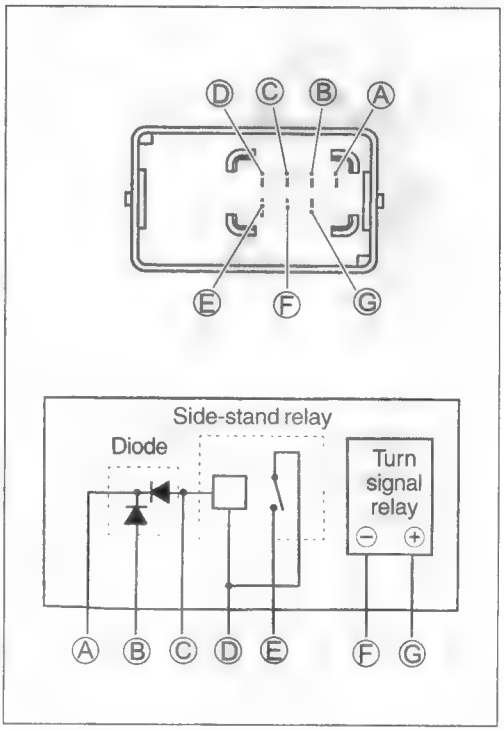

SWITCHES

Measure each switch for continuity using a tester. If any abnormality is found, replace the respective switch assemblies with new ones.

IGNITION SWITCH

Position \ Color	R	O	O/Y	B/W	Gr	Br
ON	○	○	○	○	○	○
OFF						
LOCK						
P	○					○

LIGHTING SWITCH (except for E-03, 28, 33)

Position \ Color	O/Bl	Gr	O/R	Y/W
OFF (•)				
(⁝00⁝)	○	○		
ON (☼)	○	○	○	○

DIMMER SWITCH

Position \ Color	W	Y	Y/W
HI (≣▷)		○	○
LO (≣▷)	○		○

TURN SIGNAL SWITCH

Position \ Color	Lg	Lbl	B
L (⇦)		○	○
PUSH			
R (⇨)	○	○	

PASSING LIGHT SWITCH (except for E-03, 28, 33)

Position \ Color	O/R	Y
•		
PUSH	○	○

ENGINE STOP SWITCH

Position \ Color	O/B	O/W
OFF (⊗)		
RUN (⌒)	○	○

STARTER BUTTON

Position \ Color	O/W	Y/G
•		
PUSH	○	○

HORN BUTTON

Position \ Color	B/Bl	B/W
•		
PUSH	○	○

FRONT BRAKE LIGHT SWITCH

Position \ Color	B/R	B/Bl
OFF		
ON	○	○

REAR BRAKE LIGHT SWITCH

Position \ Color	O/G	W/B
ON	○	○
OFF		

CLUTCH LEVER POSITION SWITCH

Position \ Color	B/Y	B/Y
FREE		
•	○	○

OIL PRESSURE SWITCH

Position \ Color	G/Y	Ground
ON (engine is stopped)	○	○
OFF (engine is running)		

NOTE:
Before inspecting the oil pressure switch, check if the engine oil is at the proper level. (☞ 2-9)

WIRE COLOR

B : Black
Br : Brown
Gr : Gray
Lbl : Light blue
Lg : Light green
O : Orange
R : Red
Y : Yellow
W : White
B/Bl : Black with Blue tracer
B/R : Black with Red tracer
B/Y : Black with Yellow tracer
B/W : Black with White tracer
G/Y : Green with Yellow tracer
O/B : Orange with Black tracer
O/Bl : Orange with Blue tracer
O/G : Orange with Green tracer
O/R : Orange with Red tracer
O/W : Orange with White tracer
O/Y : Orange with Yellow tracer
W/B : White with Black tracer
Y/G : Yellow with Green tracer
Y/W : Yellow with White tracer

BATTERY

SPECIFICATIONS

Type designation	YTX9-BS
Capacity	12 V, 28.8 kC (8 Ah)/10HR
Standard electrolyte S.G.	1.320 at 20°C (68°F)

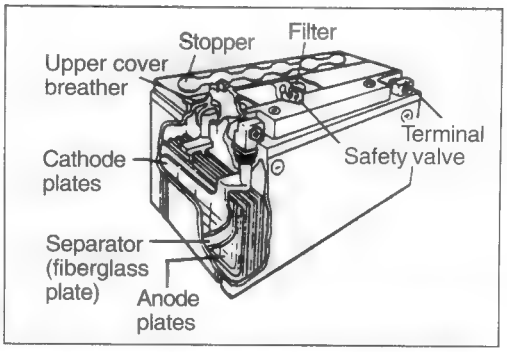

REMOVAL

- Remove the seat. (☞5-5)
- Remove the document tray ①.

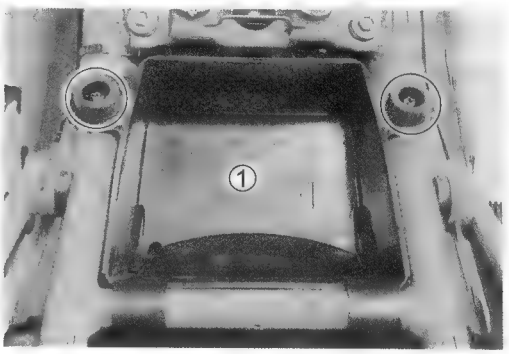

- Remove the battery ②.

NOTE:
First, disconnect the battery ⊖ lead wire Ⓐ.

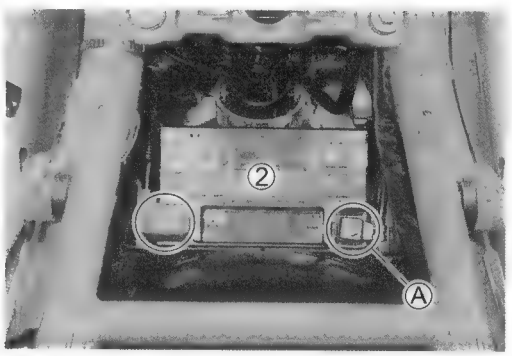

REMOUNTING

Remount the battery in the reverse order of removal.

INITIAL CHARGING

FILLING ELECTROLYTE

- Remove the aluminum tape ① which seals the battery filler holes ②.

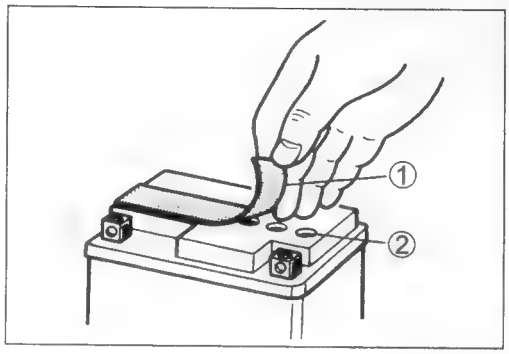

- Remove the caps ③ from the electrolyte container.

NOTE:

* *Do not remove or pierce the sealed areas ④ of the electrolyte container.*
* *After completely filling the battery with electrolyte, use the caps ③ from the electrolyte container to seal the battery filler holes.*

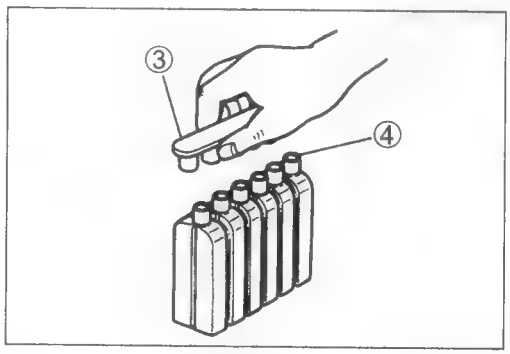

- Insert the nozzles of the electrolyte container ⑤ into the battery's electrolyte filler holes. Hold the electrolyte container firmly so that it does not fall. Do not allow any of the electrolyte to spill.

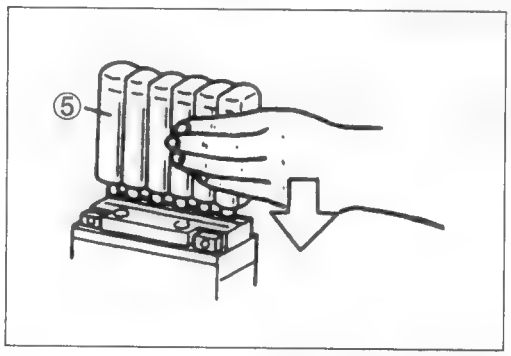

- Make sure that the air bubbles ⑥ rise to the top of each electrolyte container and leave the electrolyte container in this position for more than 20 minutes.

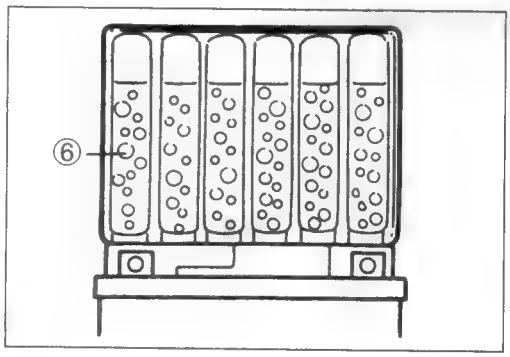

NOTE:

If air bubbles do not rise from any one of the filler ports, tap the bottom of the electrolyte container two or three times.
Never remove the electrolyte container from the battery while there is still electrolyte in the container.

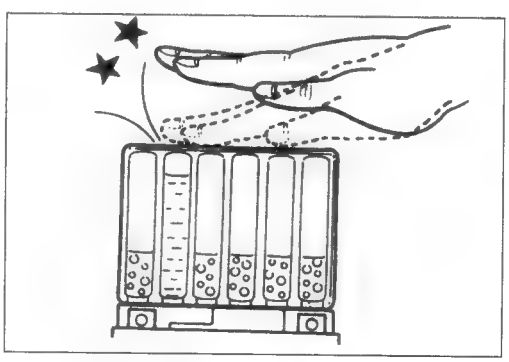

- After the electrolyte container is completely empty, remove it from the battery and wait about 20 minutes.
- Insert the caps ① firmly into the filler holes so that the top of the caps do not protrude above the upper surface of the battery's top cover.

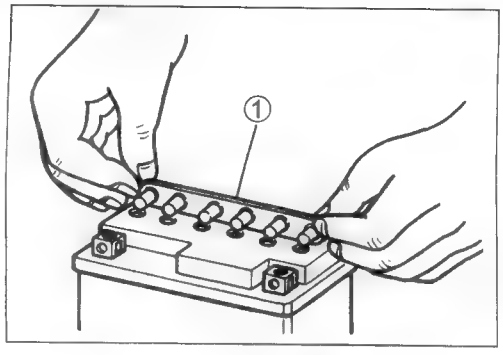

⚠ CAUTION

*** The charging system for an MF battery is different from that of a conventional battery. Only use the specified MF battery.**

*** Do not remove the caps once they are installed in the battery.**

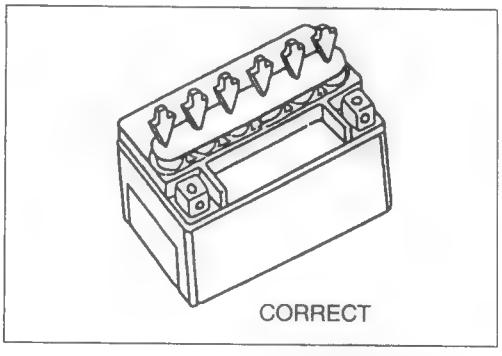

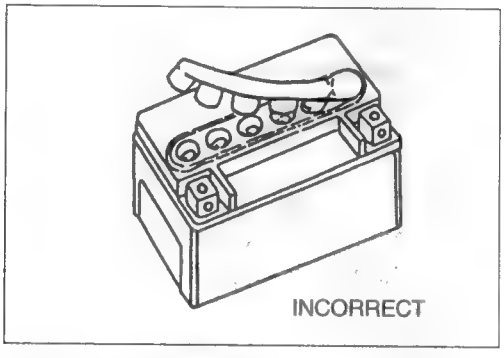

- Measure the battery voltage with a tester. The tester should indicate more than 12.5 – 12.6 V (DC), as shown. If the battery voltage is lower than specification, charge the battery with a battery charger.

NOTE:
Initial charging for a new battery is recommended if two years have elapsed since the date of manufacture.

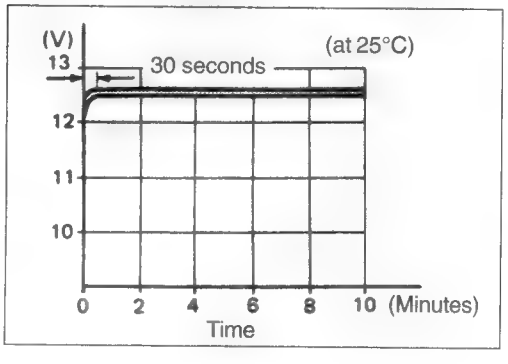

SERVICING

Visually inspect the surface of the battery container. If any signs of cracking or electrolyte leakage from the sides of the battery have occurred, replace the battery with a new one. If the battery terminals are found to be coated with rust or an acidic white powdery substance, clean the battery terminals with sandpaper.

RECHARGING OPERATION

- Measure the battery voltage using a tester. If the voltage reading is less than 12.0 V (DC), recharge the battery with a battery charger.

⚠ CAUTION

When recharging the battery, remove the battery from the motorcycle. (☞6-41)

NOTE:
While recharging, do not remove the caps on the top of the battery.

Recharging time: 0.9 A for 5 – 10 hours or 4 A for one hour

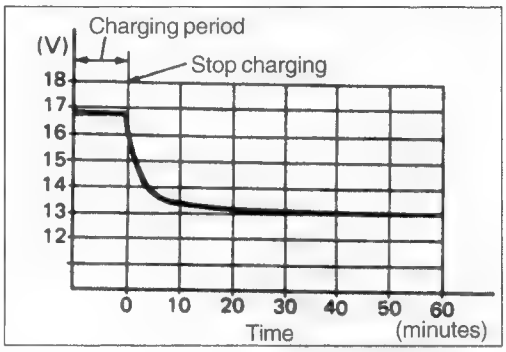

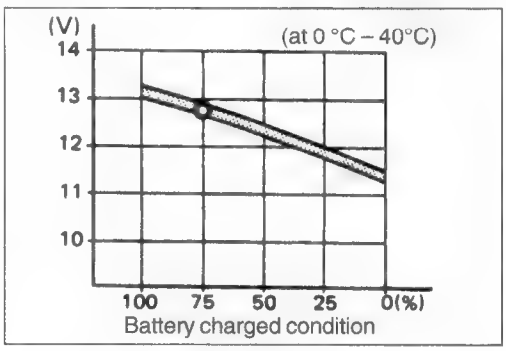

⚠ CAUTION

Be careful not to permit the charging current to exceed 4 A at any time.

- After recharging, wait at least 30 minutes and then measure the battery voltage using a tester.
- If the battery voltage is less than 12.5 V, recharge the battery again.
- If the battery voltage is still less than 12.5 V after recharging, replace the battery with a new one.
- When a battery is left unused for a long time, it's voltage needs to be regularly measured. When the motorcycle is not used for more than one month (especially during the winter season), measure the battery voltage at least once a month.

SERVICING INFORMATION

CONTENTS

TROUBLESHOOTING 7- 2
ENGINE 7- 2
CARBURETOR 7- 6
CHASSIS 7- 6
BRAKES 7- 7
ELECTRICAL 7- 8
BATTERY 7- 9
WIRING DIAGRAM 7-10
WIRE HARNESS, CABLE AND HOSE ROUTING 7-12
WIRE HARNESS ROUTING 7-12
CABLE ROUTING 7-15
PAIR (AIR SUPPLY) SYSTEM HOSE ROUTING 7-16
FRONT BRAKE HOSE ROUTING 7-17
REAR BRAKE HOSE ROUTING 7-18
FRONT FOOTREST BRACKET SET-UP 7-19
FUEL TANK SET-UP 7-20
HIGH-TENSION CORD ROUTING 7-21
MUFFLER MOUNTING 7-21
SIDE-STAND AND CENTER STAND SPRINGS 7-22
COWLING AND COWLING BRACE SET-UP 7-23
FRAME COVER AND SIDE FRAME COVER SET-UP 7-24
COWLING CUSHION AND TAPE 7-25
FRONT FENDER CUSHION 7-26
SEAT LOCK CABLE ROUTING 7-26
SPECIAL TOOLS 7-29
TIGHTENING TORQUE 7-32
ENGINE 7-32
CHASSIS 7-33
TIGHTENING TORQUE CHART 7-34
SERVICE DATA 7-35

TROUBLESHOOTING

ENGINE

Complaint	Symptom and possible causes	Remedy
Engine will not start or is hard to start.	**Compression too low**	
	1. Worn cylinder.	Rebore or replace.
	2. Worn piston ring.	Replace.
	3. Worn valve guide or improper valve seating.	Repair or replace.
	4. Loose spark plug.	Tighten.
	5. Broken, cracked or damaged piston.	Replace.
	6. Slow cranking starter motor.	See electrical section.
	7. Mistimed valves.	Adjust.
	8. Valve clearance out of adjustment.	Adjust.
	Spark plug not sparking	
	1. Damaged spark plug.	Replace.
	2. Damaged spark plug cap.	Replace.
	3. Fouled spark plug.	Clean or replace.
	4. Wet spark plug.	Clean and dry or replace.
	5. Defective ignition coil.	Replace.
	6. Open or short in high-tension cord.	Replace.
	7. Defective signal generator.	Replace.
	8. Defective ignitor.	Replace.
	No fuel reaching a carburetor	
	1. Clogged fuel tank vent hose.	Clean or replace.
	2. Clogged or defective fuel valve.	Clean or replace.
	3. Defective needle valve.	Replace with needle valve seat.
	4. Clogged fuel hose.	Clean or replace.
	5. Clogged fuel filter.	Clean or replace.
Engine stalls easily.	1. Fouled spark plug.	Clean or replace.
	2. Defective signal generator.	Replace.
	3. Defective ignitor.	Replace.
	4. Clogged fuel hose.	Clean.
	5. Clogged carburetor jet.	Clean.
	6. Valve clearance out of adjustment.	Adjust.

Complaint	Symptom and possible causes	Remedy
Engine is noisy.	**Excessive valve chatter**	
	1. Excessive valve clearance.	Adjust.
	2. Weak or broken valve spring.	Replace.
	3. Worn rocker arm or rocker arm shaft.	Replace.
	4. Worn or burnt camshaft journal.	Replace.
	Noise seems to come from the piston	
	1. Worn piston.	Replace.
	2. Worn cylinder.	Rebore or replace.
	3. Carbon build-up in combustion chamber.	Clean.
	4. Worn piston pin or piston pin bore.	Replace.
	5. Worn piston ring or ring groove.	Replace.
	Noise seems to come from the cam chain	
	1. Stretched cam chain.	Replace cam chain and sprockets.
	2. Worn cam chain sprocket.	Replace cam chain and sprockets.
	3. Improperly working cam chain tensioner.	Repair or replace.
	Noise seems to come from the clutch	
	1. Worn countershaft spline.	Replace countershaft.
	2. Worn clutch hub spline.	Replace clutch hub.
	3. Worn clutch plate teeth.	Replace clutch plate.
	4. Distorted clutch plate.	Replace.
	5. Worn clutch release bearing.	Replace.
	6. Weak clutch damper.	Replace primary driven gear.
	Noise seems to come from the crankshaft	
	1. Worn or burnt crank pin bearing.	Replace.
	2. Worn or burnt journal bearing.	Replace.
	3. Excessive thrust clearance.	Replace thrust bearing.
	Noise seems to come from the transmission	
	1. Worn or rubbing gear.	Replace.
	2. Worn countershaft spline.	Replace countershaft.
	3. Worn driveshaft spline.	Replace driveshaft.
	4. Worn or rubbing primary gear.	Replace.
	5. Worn bearing.	Replace.
Clutch slips.	1. Clutch cable out of adjustment.	Adjust.
	2. Weak or broken clutch spring.	Replace.
	3. Worn or distorted clutch pressure plate.	Replace.
	4. Distorted clutch plate.	Replace.
Clutch drags.	1. Clutch out of adjustment.	Adjust.
	2. Some clutch springs are weak, while others are not.	Replace.
	3. Worn or distorted clutch pressure plate.	Replace.
	4. Distorted clutch plate.	Replace.
Transmission will not shift.	1. Broken gearshift cam.	Replace.
	2. Distorted gearshift fork.	Replace.
	3. Worn gearshift pawl.	Replace.

Complaint	Symptom and possible causes	Remedy
Transmission will not shift back.	1. Broken gearshift shaft return spring. 2. Rubbing or stuck gearshift shaft. 3. Worn or distorted gearshift fork.	Replace. Repair or replace. Replace.
Transmission jumps out of gear.	1. Worn gear. 2. Worn or distorted gearshift fork. 3. Weakened gearshift stopper spring. 4. Worn gearshift pawl.	Replace. Replace. Replace. Replace.
Engine idles poorly.	1. Valve clearance out of adjustment. 2. Improper valve seating. 3. Worn valve guide. 4. Worn rocker arm or rocker arm shaft. 5. Excessive spark plug gap. 6. Defective ignition coil. 7. Defective signal generator. 8. Defective ignitor. 9. Incorrect float chamber fuel level. 10. Clogged carburetor jet. 11. Carburetors not synchronized.	Adjust. Repair or replace. Replace. Replace. Adjust or replace. Replace. Replace. Replace. Adjust float height. Clean. Synchronize.
Engine runs poorly in high-speed range.	1. Weak valve spring. 2. Worn camshaft. 3. Insufficient spark plug gap. 4. Mistimed valves. 5. Ignition not advanced sufficiently due to poorly working timing advance circuit. 6. Defective ignition coil. 7. Defective signal generator. 8. Defective ignitor. 9. Low float chamber fuel level. 10. Dirty air cleaner element. 11. Clogged fuel hose, resulting in inadequate fuel supply to carburetor.	Replace. Replace. Regap or replace. Adjust. Replace ignitor. Replace. Replace. Replace. Adjust float height. Clean or replace. Clean and prime.
Exhaust smoke is dirty or thick.	1. Excessive amount of engine oil. 2. Worn cylinder. 3. Worn piston ring. 4. Worn valve guide. 5. Scored or scuffed cylinder wall. 6. Worn valve stem. 7. Defective valve stem oil seal. 8. Worn oil ring side rail.	Check level and drain. Rebore or replace. Replace. Replace. Rebore or replace. Replace valve. Replace. Replace oil ring.

Complaint	Symptom and possible causes	Remedy
Engine lacks power.	1. Insufficient valve clearance.	Adjust.
	2. Weak valve spring.	Replace.
	3. Mistimed valves.	Adjust.
	4. Worn cylinder.	Rebore or replace.
	5. Worn piston ring.	Replace.
	6. Improper valve seating	Repair or replace.
	7. Fouled spark plug.	Clean or replace.
	8. Incorrect spark plug.	Replace.
	9. Clogged carburetor jet.	Clean.
	10. Incorrect float chamber fuel level.	Adjust float height.
	11. Dirty air cleaner element.	Clean or replace.
	12. Loose throttle valve synchronizing screw.	Tighten.
	13. Air leakage from intake pipe.	Tighten or replace.
	14. Excessive amount of engine oil.	Check level and drain.
Engine overheats.	1. Carbon build-up on piston crown.	Clean.
	2. Insufficient amount of engine oil.	Check level and add.
	3. Defective oil pump.	Replace.
	4. Clogged oil circuit.	Clean.
	5. Float chamber fuel level too low.	Adjust float height.
	6. Air leakage from intake pipe.	Tighten or replace.
	7. Incorrect engine oil.	Change.

CARBURETOR

Complaint	Symptom and possible causes	Remedy
Starting difficulty.	1. Clogged starter jet.	Clean.
	2. Clogged starter jet passage.	Clean.
	3. Air leaking from joint between starter body and carburetor.	Tighten, adjust or replace gasket.
	4. Air leaking from carburetor joint or vacuum hose joint.	Tighten or replace defective part.
	5. Improperly working starter (enricher) plunger.	Adjust.
Idling or low-speed trouble.	1. Clogged or loose pilot jet.	Clean or tighten.
	2. Clogged or loose pilot air jet.	Clean or tighten.
	3. Air leaking from carburetor joint, vacuum pipe joint, or starter.	Tighten or replace defective part.
	4. Clogged pilot outlet port.	Clean.
	5. Clogged bypass port.	Clean.
	6. Starter (enricher) plunger not fully closed.	Adjust.
Medium-or high speed trouble.	1. Clogged main jet.	Clean.
	2. Clogged main air jet.	Clean.
	3. Clogged needle jet.	Clean.
	4. Improperly working throttle valve.	Adjust.
	5. Clogged fuel filter.	Clean or replace.
Overflow and fuel level fluctuations.	1. Worn or damaged needle valve.	Replace.
	2. Broken needle valve spring.	Replace.
	3. Improperly working float.	Adjust or replace.
	4. Foreign matter on the needle valve.	Clean or replace with needle valve seat.
	5. Incorrect float chamber fuel level.	Adjust float height.

CHASSIS

Complaint	Symptom and possible causes	Remedy
Steering is heavy.	1. Overtightened steering stem nut.	Adjust.
	2. Broken bearing/race in steering stem.	Replace.
	3. Distorted steering stem.	Replace.
	4. Low tire pressure.	Regulate.
Handlebar wobbles.	1. Loss of balance between right and left front forks.	Adjust or replace.
	2. Distorted front fork.	Repair or replace.
	3. Distorted front axle.	Replace.
	4. Twisted tire.	Replace.
Front wheel wobbles.	1. Distorted wheel rim.	Replace.
	2. Worn front wheel bearing.	Replace.
	3. Defective or incorrect tire.	Replace.
	4. Loose front axle nut.	Tighten.
	5. Loose front axle pinch bolt.	Tighten.
	6. Incorrect fork oil level.	Adjust.

Complaint	Symptom and possible causes	Remedy
Front suspension too soft.	1. Weak spring. 2. Insufficient fork oil.	Replace. Check level and add.
Front suspension too stiff.	1. Excessively viscous fork oil. 2. Excessive fork oil.	Replace. Check level and drain.
Front suspension too noisy.	1. Insufficient fork oil. 2. Loose front suspension fastener.	Check level and add. Tighten.
Rear wheel wobbles.	1. Distorted wheel rim. 2. Worn rear wheel bearing. 3. Defective or incorrect tire. 4. Worn swingarm bearing. 5. Worn rear suspension bush. 6. Loose rear suspension fastener.	Replace. Replace. Replace. Replace. Replace. Tighten.
Rear suspension too soft.	1. Weak rear shock absorber spring. 2. Rear shock absorber leaks oil. 3. Improper suspension setting.	Replace. Replace. Adjust.
Rear suspension too stiff.	1. Improper suspension setting. 2. Bent rear shock absorber shaft. 3. Bent swingarm. 4. Worn swingarm and rear suspension related bearings.	Adjust. Replace. Replace. Replace.
Rear suspension too noisy.	1. Loose rear suspension fastener. 2. Worn rear suspension bush. 3. Worn swingarm bearing.	Tighten. Replace. Replace.

BRAKES

Complaint	Symptom and possible causes	Remedy
Brake power insufficient.	1. Leakage of brake fluid. 2. Worn brake pad. 3. Oil on brake pad surface. 4. Worn brake disc. 5. Air in hydraulic system.	Repair or replace. Replace. Clean brake disc and brake pads. Replace. Bleed.
Brake squeaks.	1. Carbon adhesion on brake pad surface. 2. Tilted brake pad. 3. Damaged wheel bearing. 4. Worn brake pad. 5. Foreign material in brake fluid. 6. Clogged return port of master cylinder. 7. Loose front or rear axle.	Clean surface with sandpaper. Readjust brake pad position or replace. Replace. Replace. Change brake fluid. Disassemble and clean master cylinder. Tighten.
Brake lever or pedal stroke excessive.	1. Air in hydraulic system. 2. Insufficient brake fluid. 3. Incorrect brake fluid.	Bleed. Check level and add. Bleed any air. Change.
Brake fluid leaks.	1. Loose connection joint. 2. Cracked hose. 3. Worn piston seal. 4. Worn secondary cup.	Tighten. Replace. Replace. Replace.

Complaint	Symptom and possible causes	Remedy
Brake drags.	1. Rusty part. 2. Insufficient brake lever or brake pedal pivot lubrication.	Clean and lubricate. Lubricate.

ELECTRICAL

Complaint	Symptom and possible causes	Remedy
No sparking or poor sparking.	1. Defective ignition coil. 2. Defective spark plug. 3. Defective signal generator. 4. Defective ignitor.	Replace. Replace. Replace. Replace.
Spark plug is wet or quickly becomes fouled with carbon.	1. Excessively rich air/fuel mixture. 2. Excessively high idling speed. 3. Incorrect gasoline. 4. Dirty air cleaner element. 5. Incorrect spark plug (cold type).	Adjust carburetor. Adjust carburetor. Change. Clean or replace. Change to hot type spark plug.
Spark plug quickly becomes fouled with oil or carbon.	1. Worn piston ring. 2. Worn piston. 3. Worn cylinder. 4. Excessive valve-stem to valve-guide clearance. 5. Worn valve stem oil seal.	Replace. Replace. Rebore or replace. Replace. Replace.
Spark plug electrodes overheat or burn.	1. Incorrect spark plug (hot type). 2. Overheated engine. 3. Loose spark plug. 4. Excessively lean air/fuel mixture.	Change to cold type spark plug. Tune-up. Tighten. Adjust carburetor.
Generator does not charge.	1. Open or short in lead wires, or loose lead connections. 2. Shorted, grounded or open generator coil. 3. Shorted or punctured IC regulator or rectifier.	Repair, replace or connect properly. Replace. Replace.
Generator charges but charging rate is below the specifications.	1. Lead wires tend to get shorted or open-circuited or loosely connected at terminal. 2. Grounded or open-circuited stator coils or generator. 3. Defective IC regulator or rectifier. 4. Defective battery cell plates.	Repair or tighten. Replace. Replace. Replace battery.
Generator overcharges.	1. Internal short-circuit in the battery. 2. Damaged or defective IC regulator or rectifier. 3. Poorly grounded IC regulator.	Replace battery. Replace. Clean and tighten ground connection.
Unstable charging.	1. Lead wire insulation frayed due to vibration, resulting in intermittent shorting. 2. Internally shorted generator. 3. Defective IC regulator or rectifier.	Repair or replace. Replace. Replace.
Starter button does not work.	1. Run down battery. 2. Defective switch contact. 3. Brushes do not seat properly on the commutator in the starter motor. 4. Defective starter relay/starter interlock switch.	Recharge or replace. Replace. Repair or replace. Replace.

BATTERY (MF BATTERY)

Complaint	Symptom and possible causes	Remedy
Sulfation or spots on surfaces of cell plates.	1. Cracked battery case. 2. Battery has been left in a run-down condition for a long time.	Replace the battery. Replace.
Battery runs down quickly.	1. Incorrect charging method.	Check generator, IC regulator, or rectifier circuit connections, and make necessary adjustment to obtain specified charging operation.
	2. Battery cell plates have lost much of their active material as a result of overcharging.	Replace battery and correct charging system.
	3. Internally shorted battery.	Replace.
	4. Excessively low battery voltage.	Recharge.
	5. Battery is too old.	Replace.
	6. Dirty container top and sides.	Clean.
Battery sulfation.	1. Incorrect charging rate. (When not in use, the battery should be checked at least once a month and properly charged if necessary, to avoid sulfation.)	Replace battery.
	2. The battery was left unused in a cold climate for too long.	Replace the battery if badly sulfated.
Battery discharges too rapidly.	1. Dirty container top and sides. 2. Current leaks.	Clean. Measure leakage current and replace defective parts.

WIRING DIAGRAM

GSF600S (FOR E-03, 28, 33)

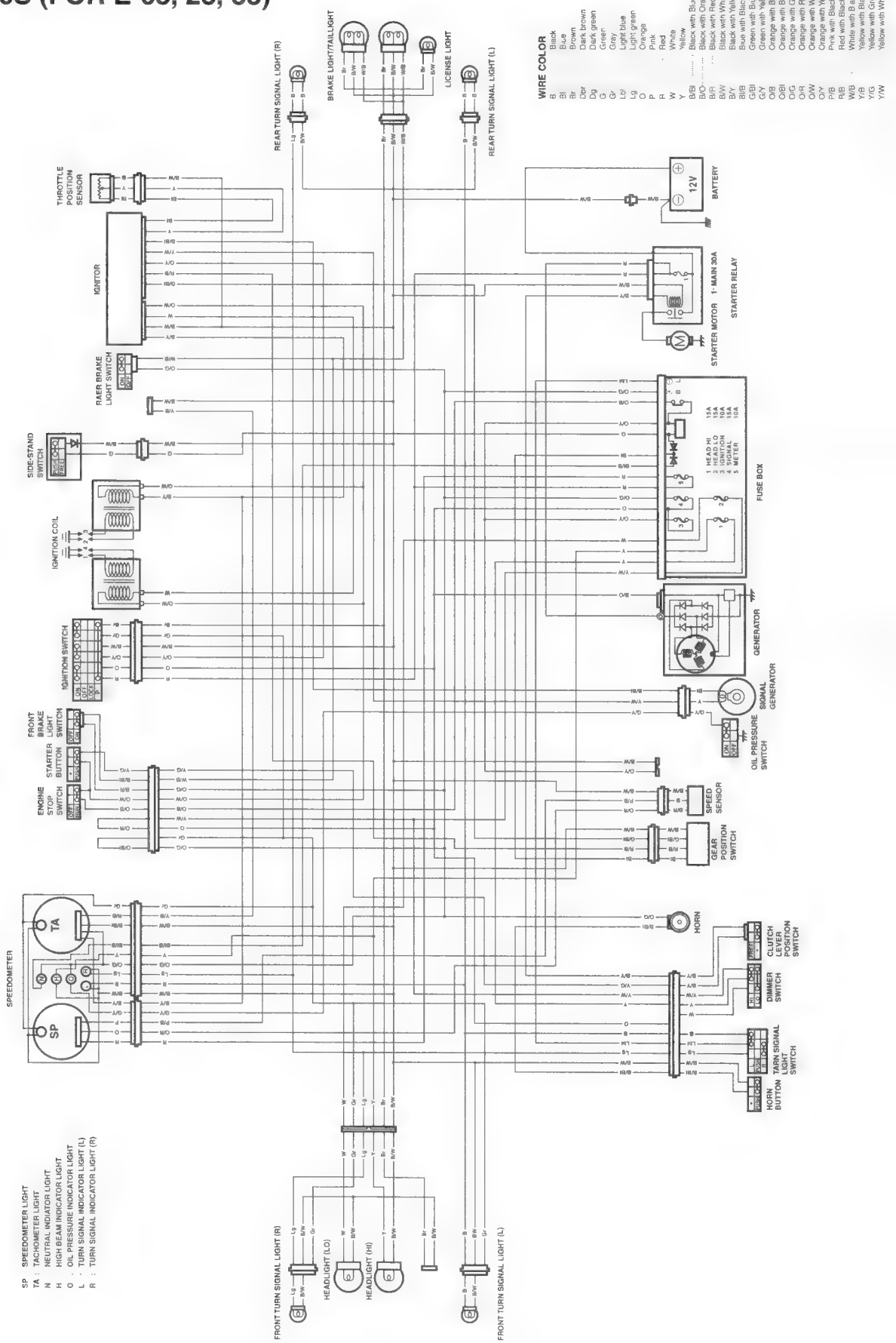

FOR THE OTHERS

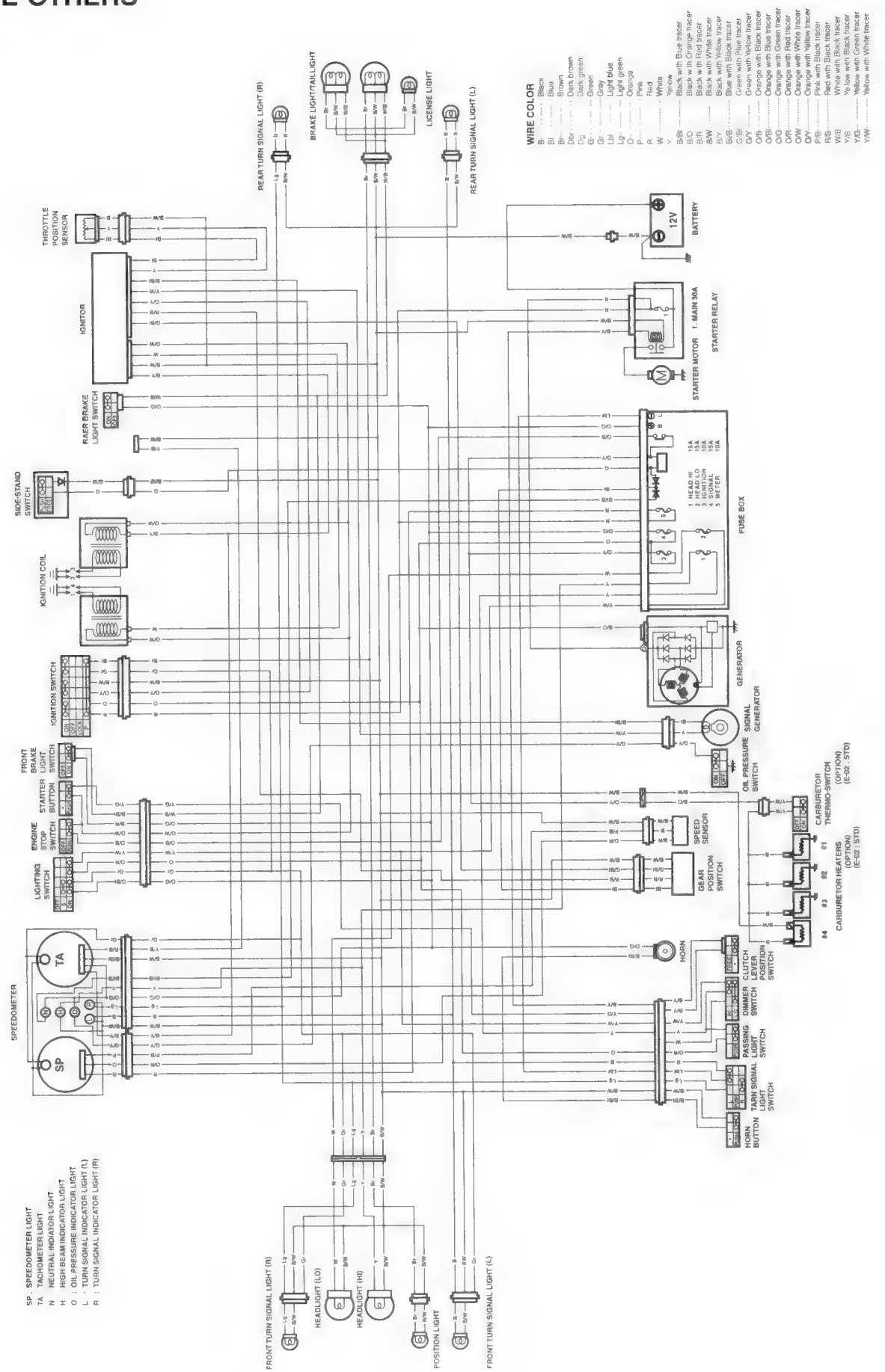

WIRE HARNESS, CABLE AND HOSE ROUTING

WIRE HARNESS ROUTING

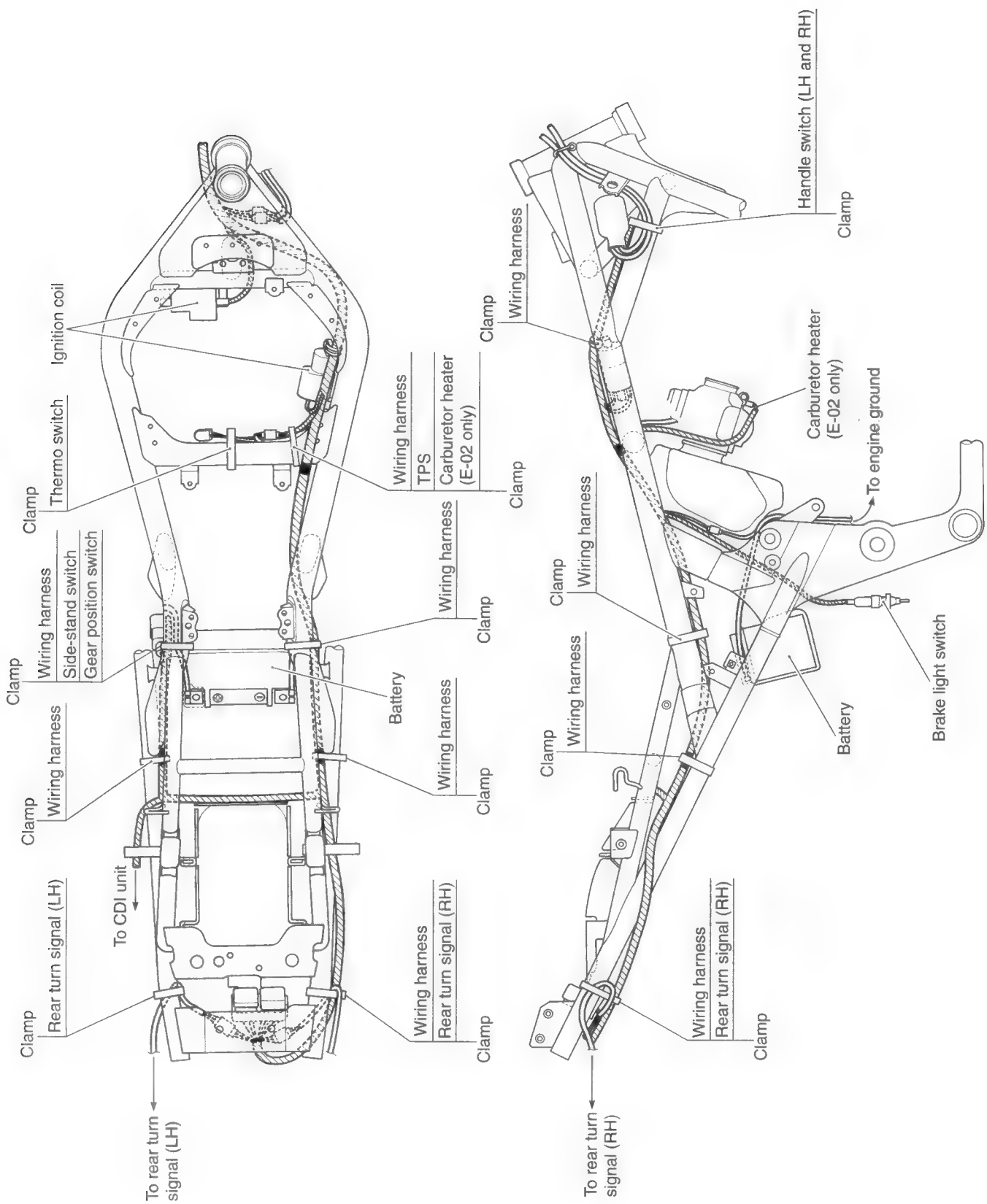

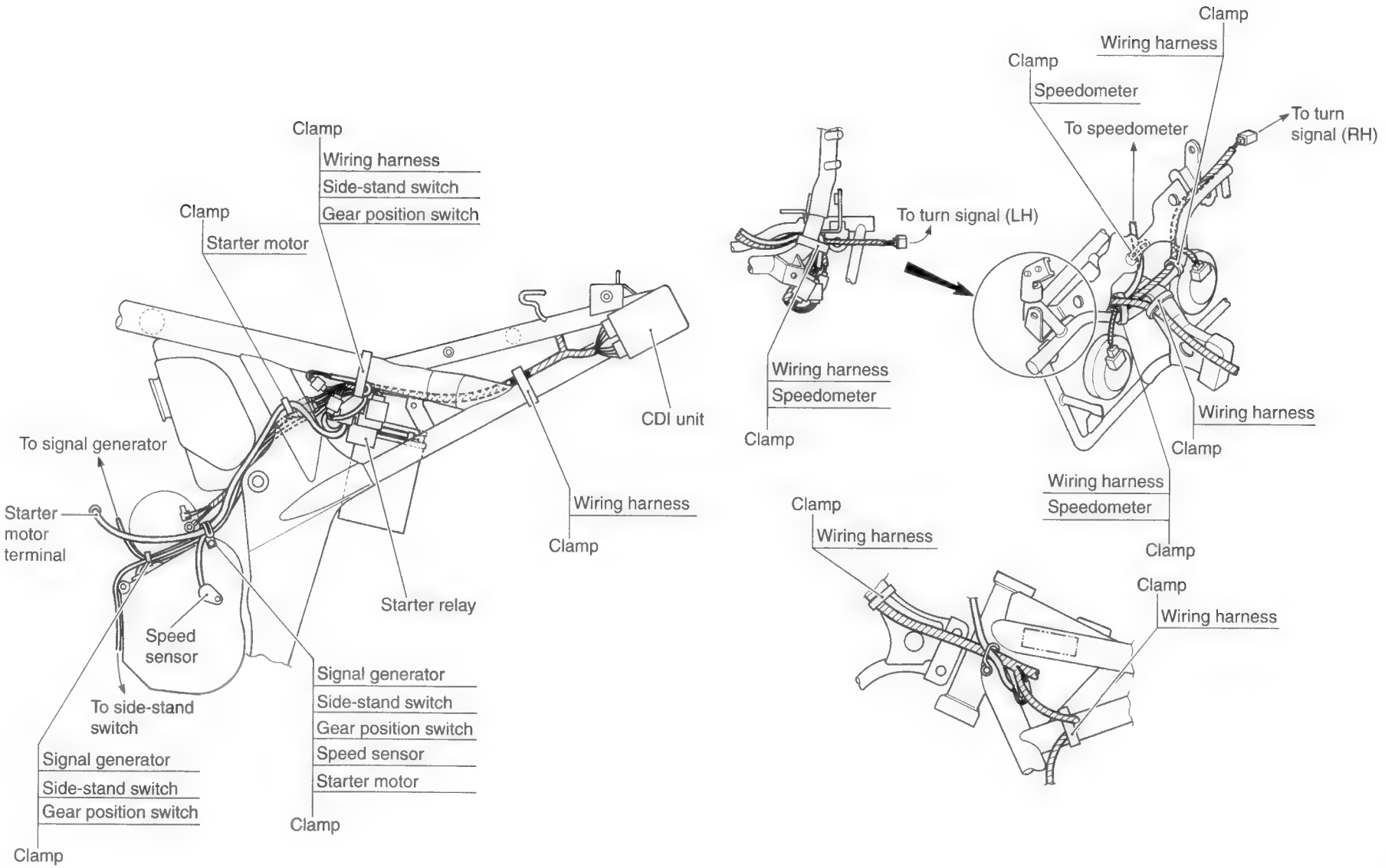
Clamp
Wiring harness
Side-stand switch
Gear position switch
Clamp
Starter motor
CDI unit
To signal generator
Starter motor terminal
Wiring harness
Clamp
Starter relay
Speed sensor
To side-stand switch
Signal generator
Side-stand switch
Gear position switch
Clamp
Signal generator
Side-stand switch
Gear position switch
Speed sensor
Starter motor
Clamp
To turn signal (LH)
Wiring harness
Speedometer
Clamp
Clamp
Wiring harness
Clamp
Speedometer
To speedometer
To turn signal (RH)
Wiring harness
Clamp
Wiring harness
Speedometer
Clamp
Clamp
Wiring harness
Clamp
Wiring harness

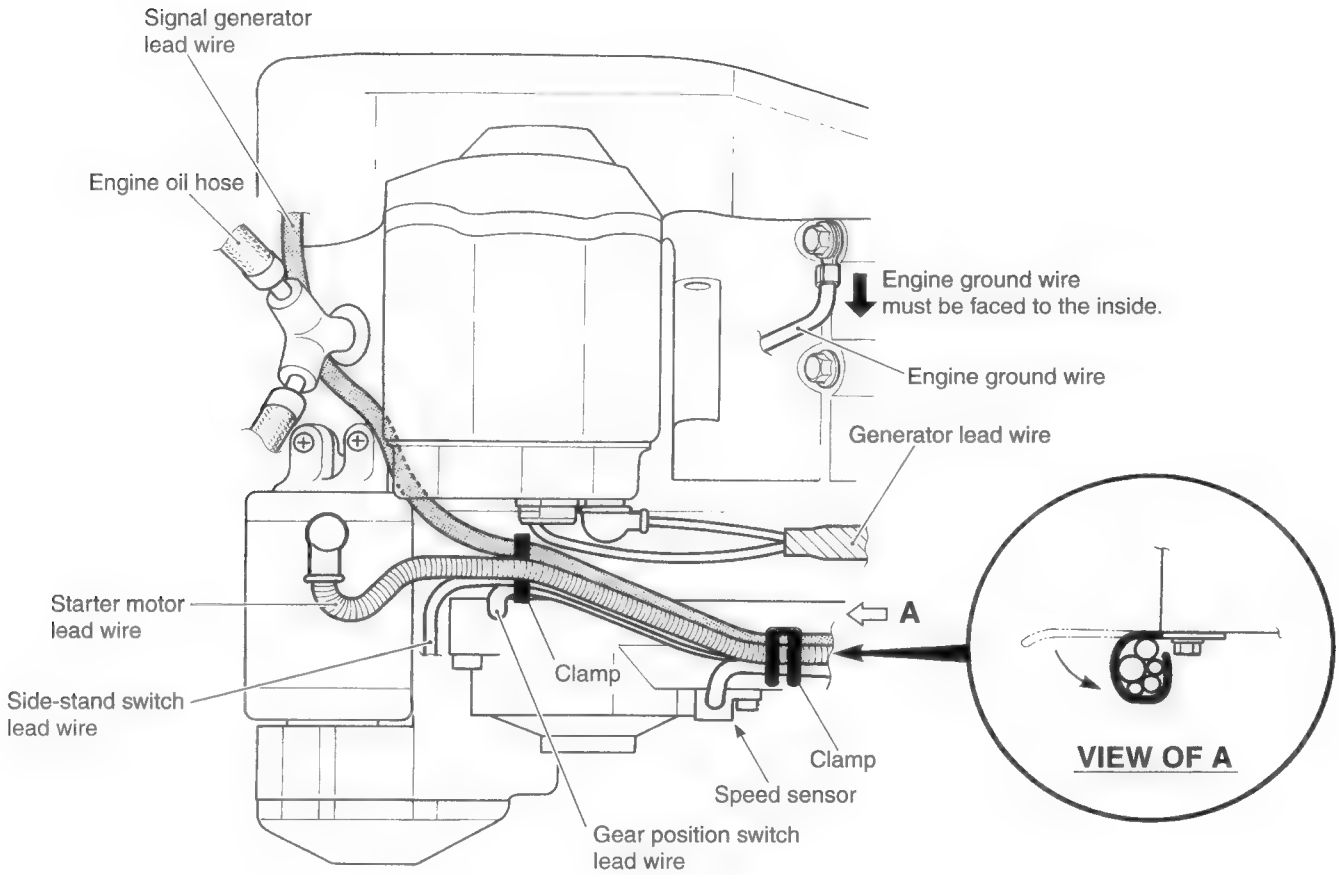
Signal generator lead wire
Engine oil hose
Engine ground wire must be faced to the inside.
Engine ground wire
Generator lead wire
A
Starter motor lead wire
Side-stand switch lead wire
Clamp
Clamp
Speed sensor
Gear position switch lead wire
VIEW OF A

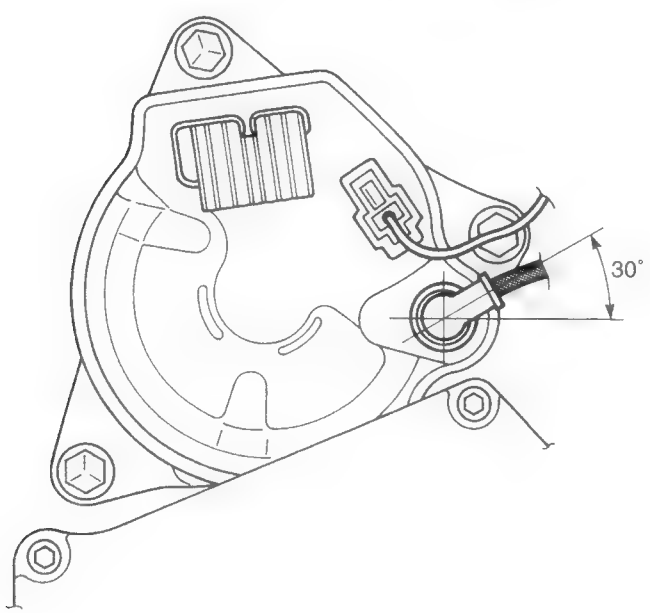
30°

CABLE ROUTING

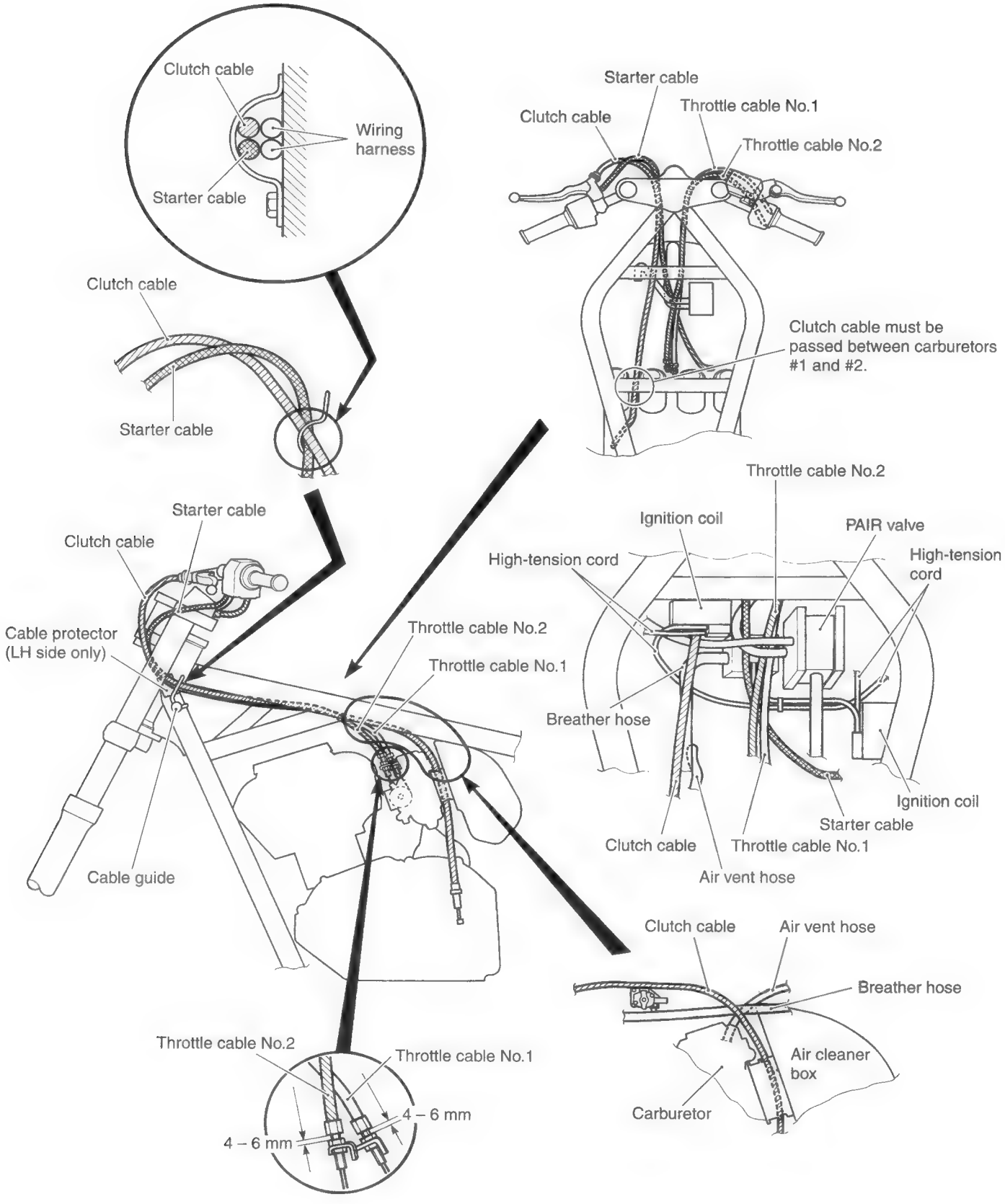

PAIR (AIR SUPPLY) SYSTEM HOSE ROUTING

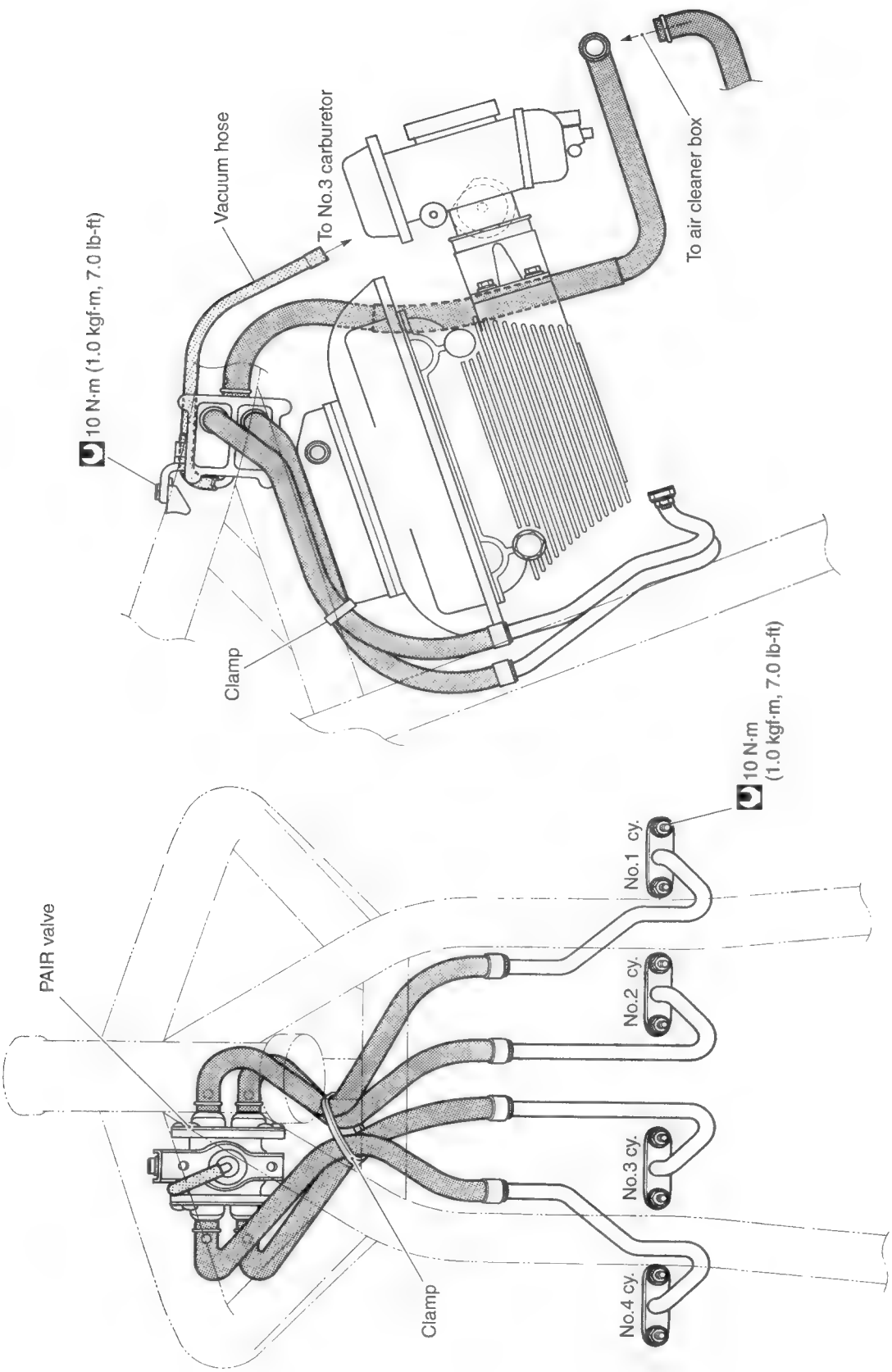

FRONT BRAKE HOSE ROUTING

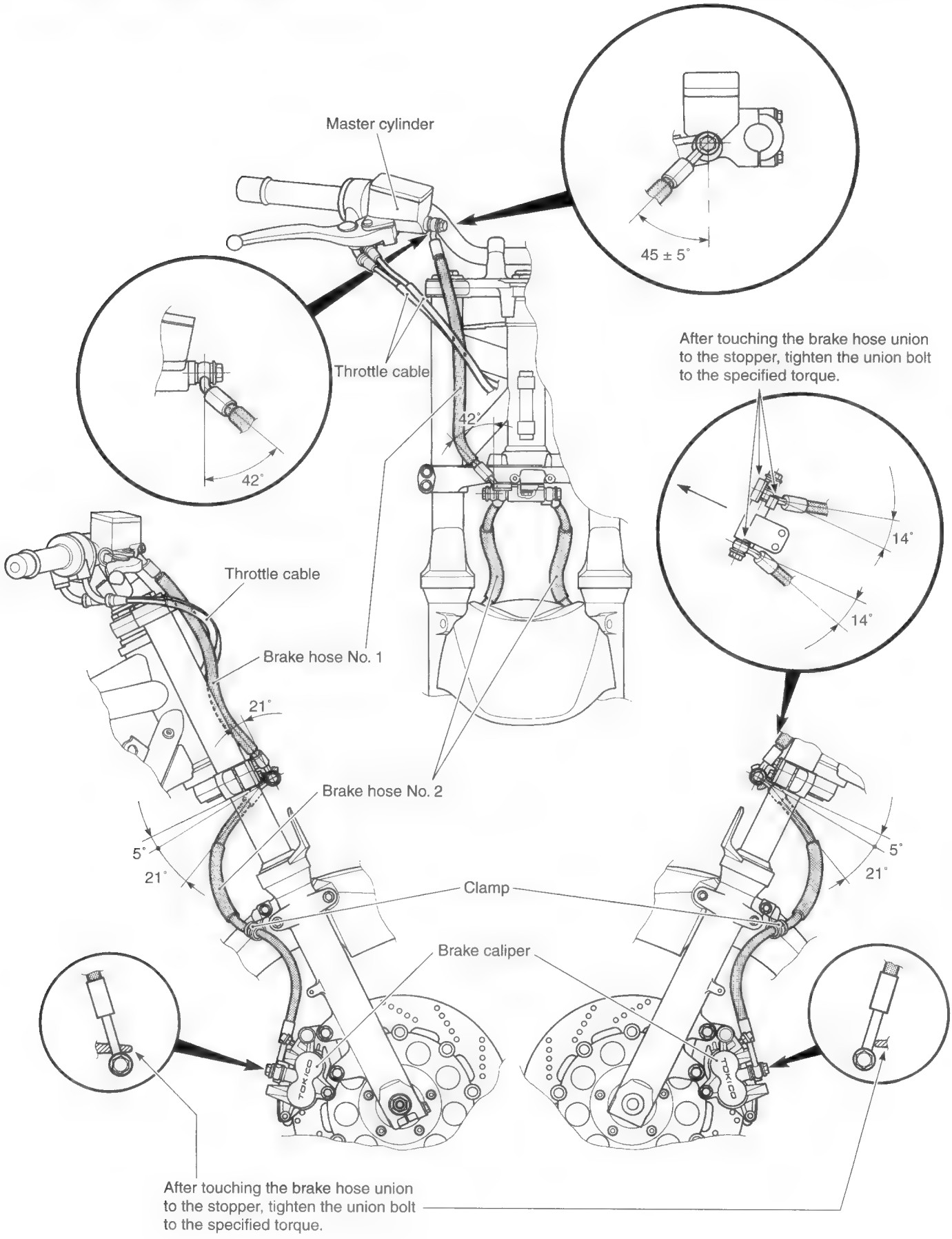

REAR BRAKE HOSE ROUTING

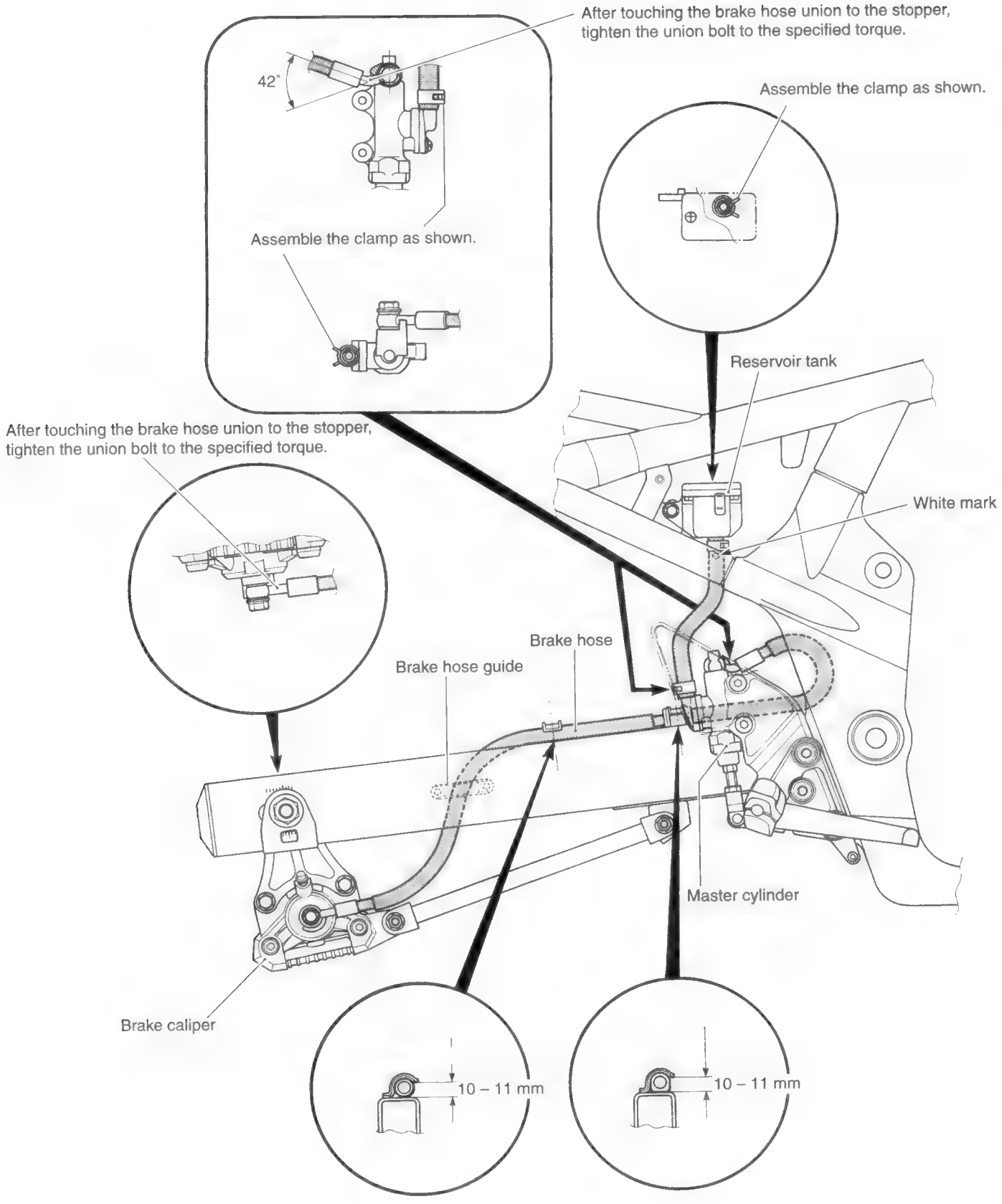

FRONT FOOTREST BRACKET SET-UP

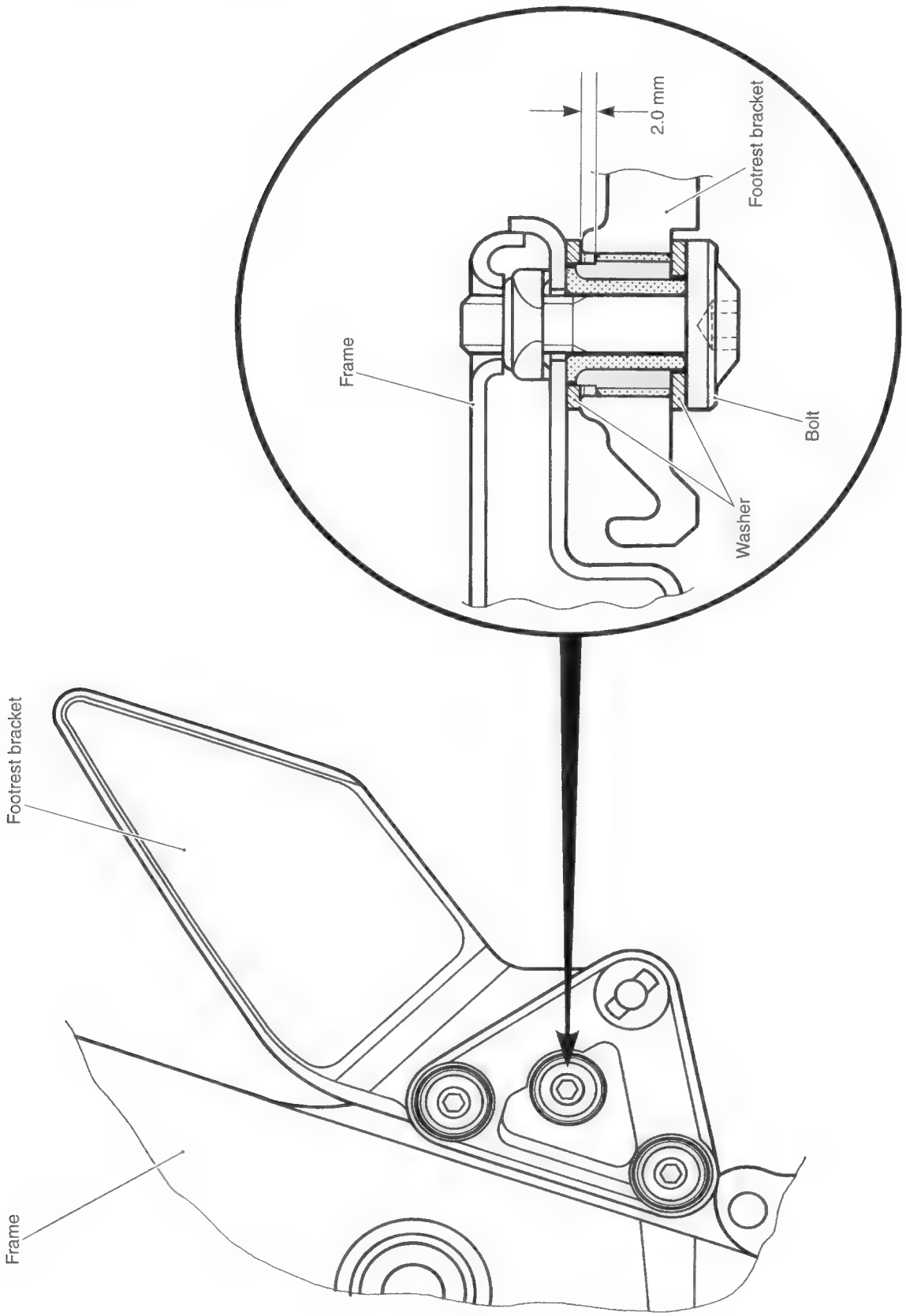

FUEL TANK SET UP

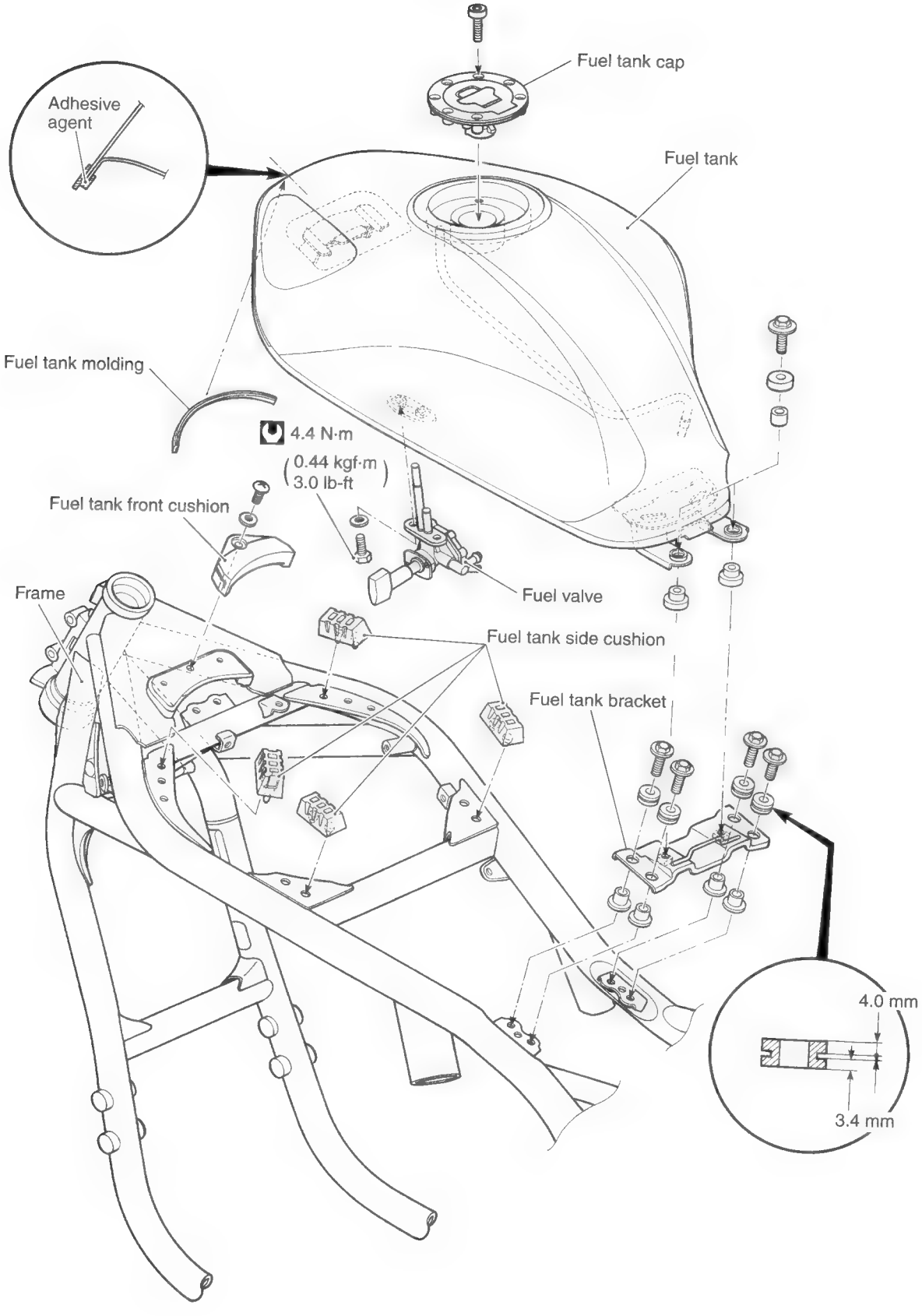

HIGH-TENSION CORD ROUTING

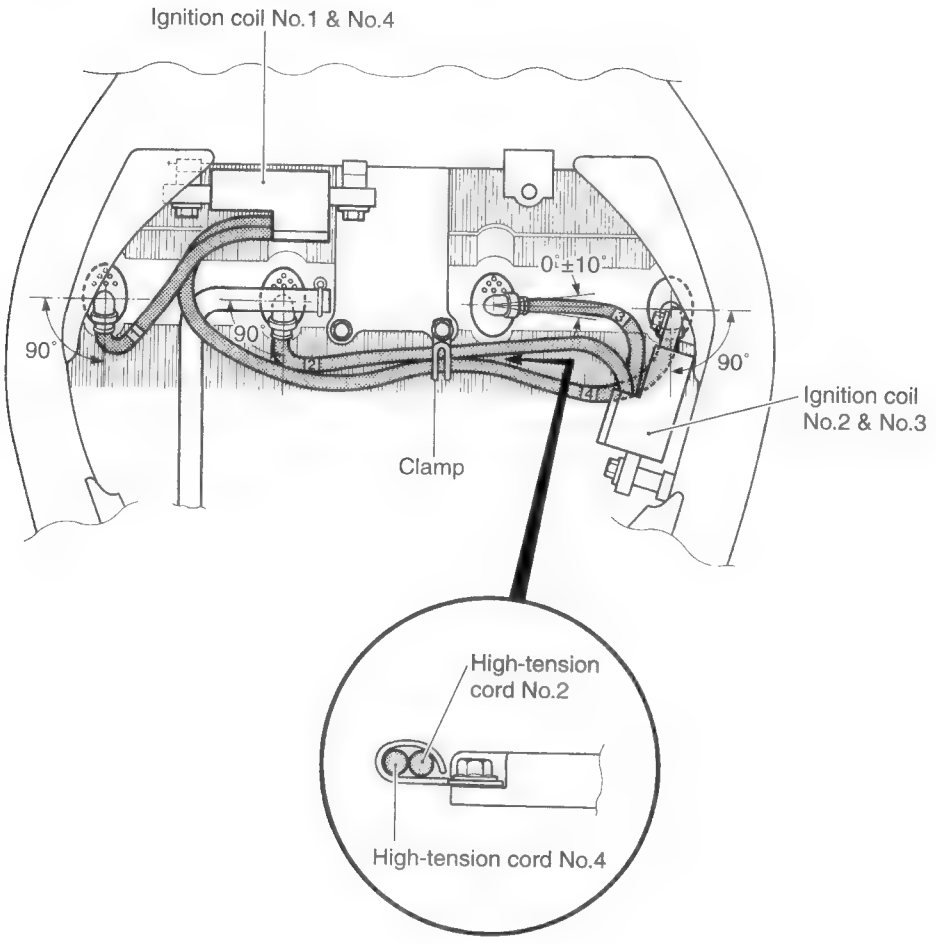

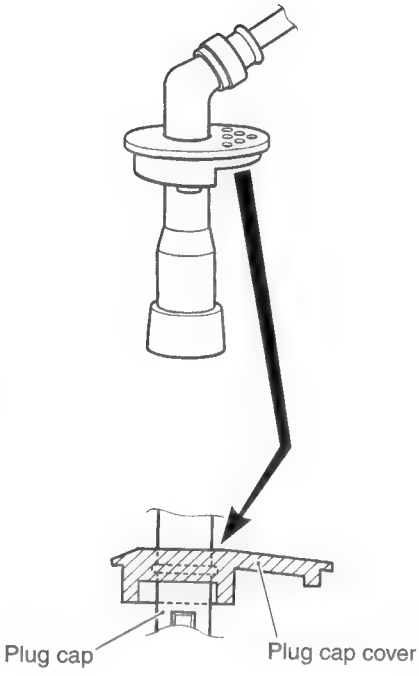

MUFFLER MOUNTING

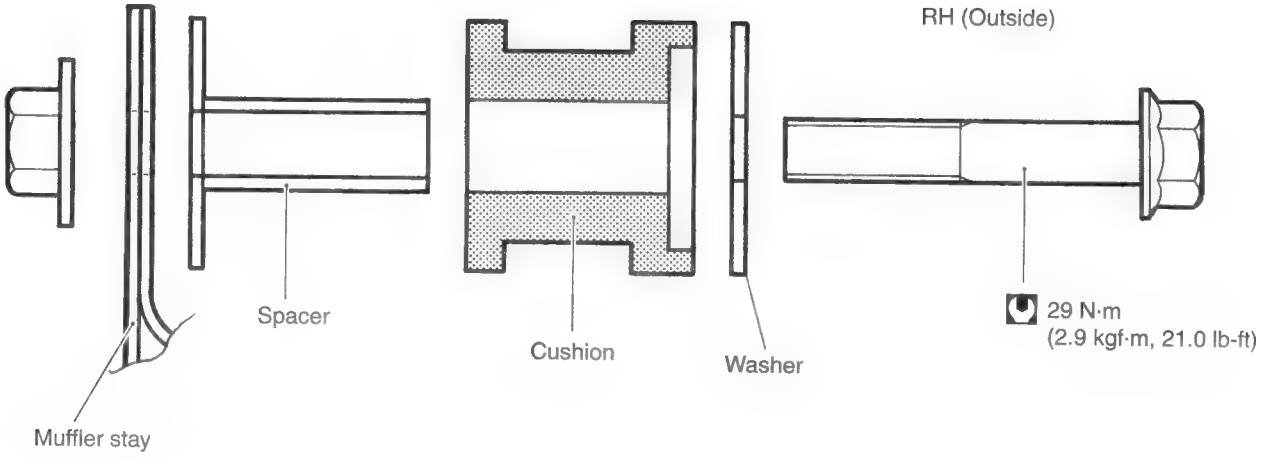

SIDE-STAND SPRINGS

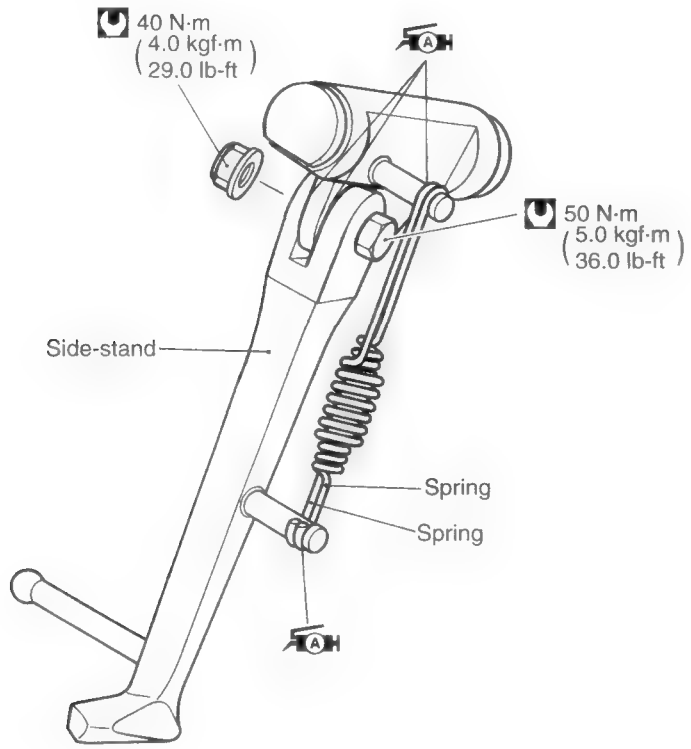

CENTER STAND SPRINGS

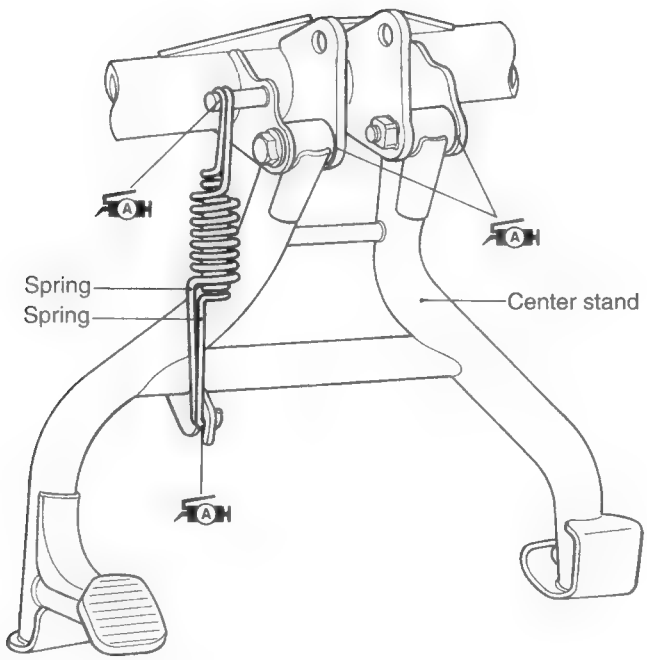

COWLING AND COWLING BRACE SET-UP

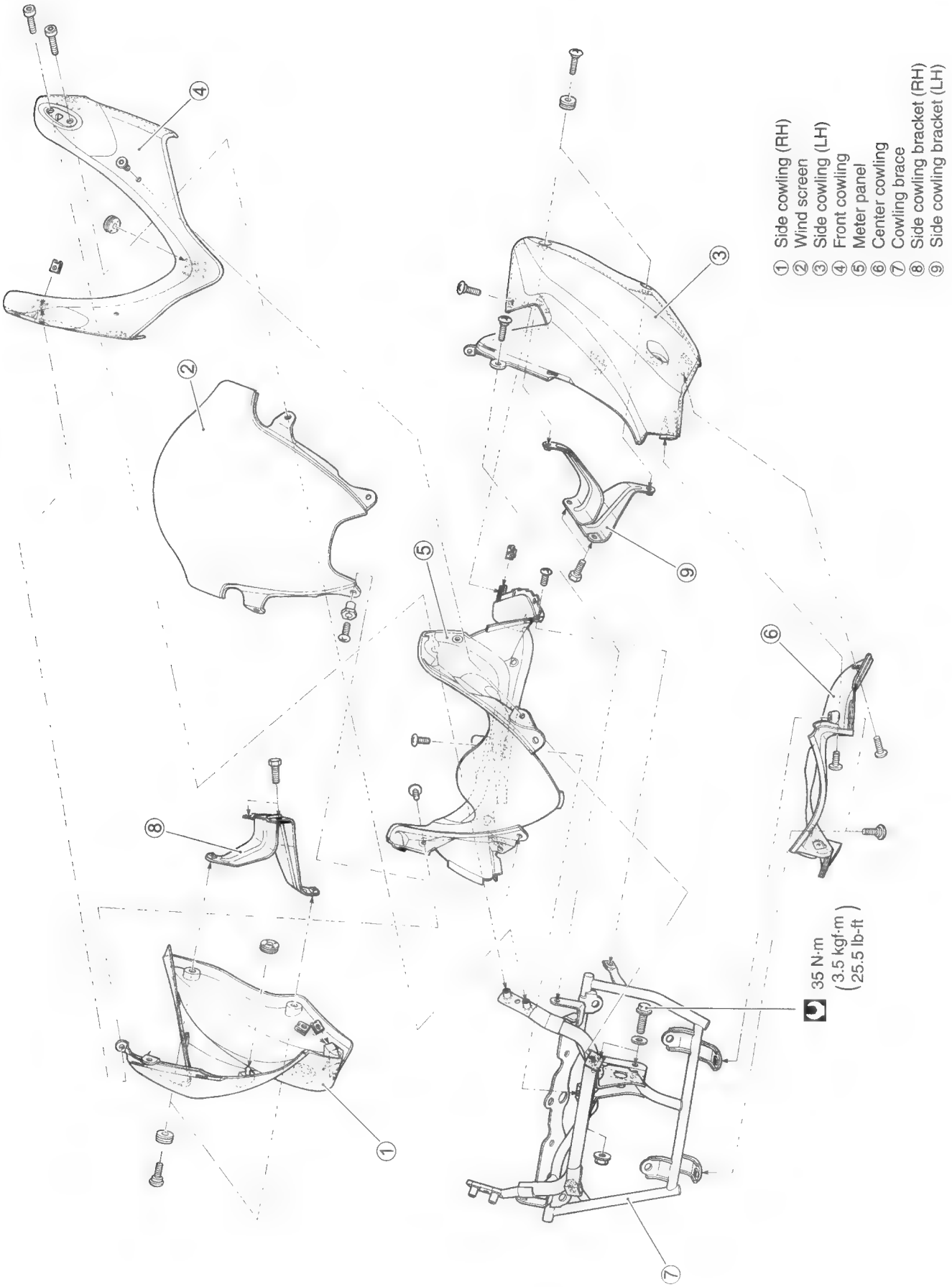

FRAME COVER AND SIDE FRAME COVER SET UP

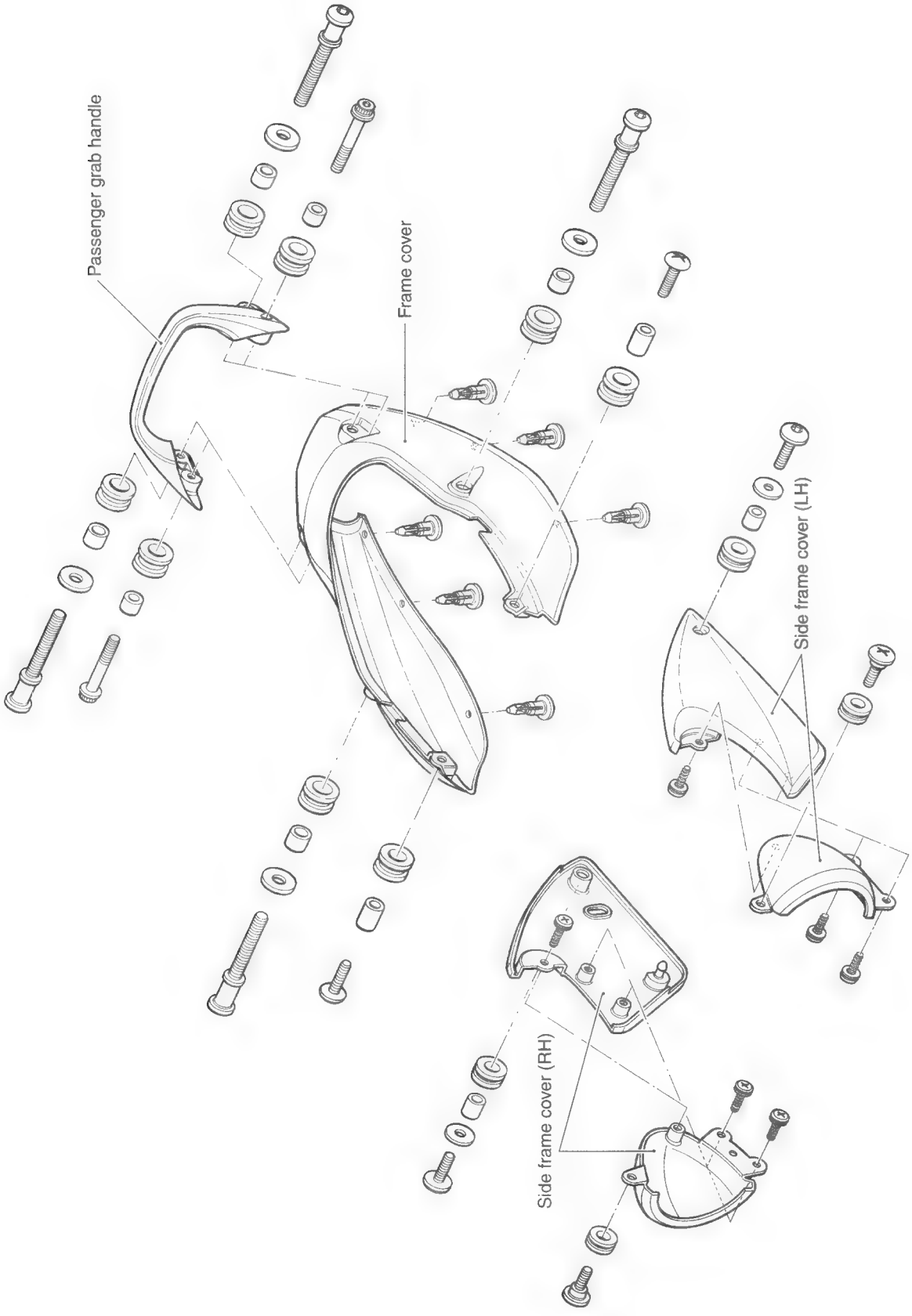

COWLING CUSHION AND TAPE

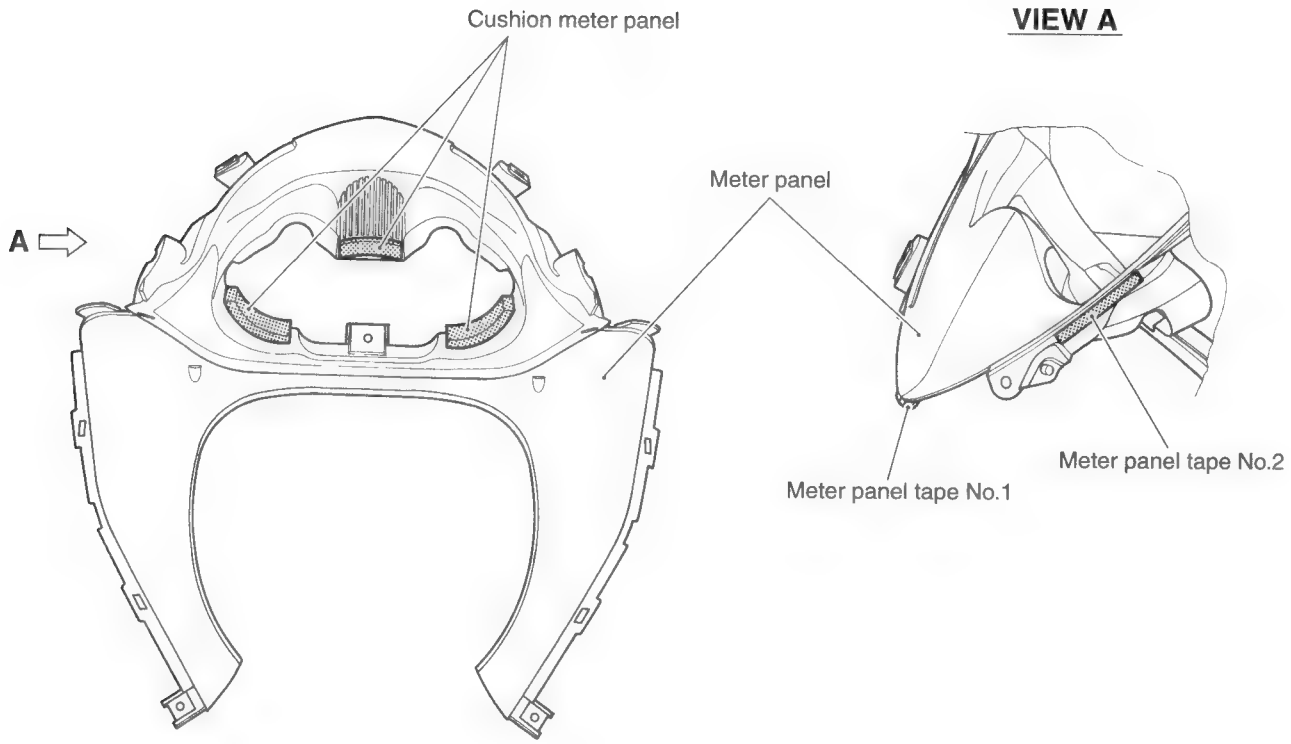

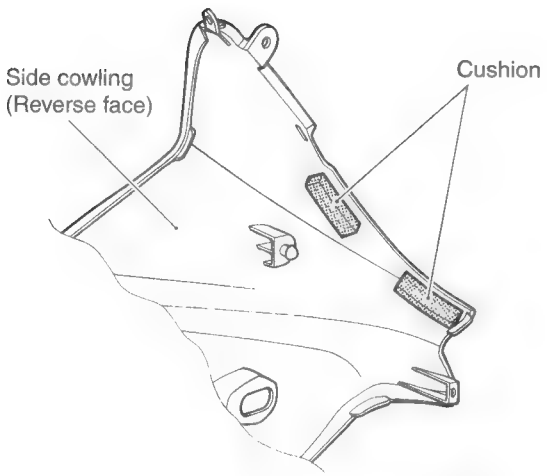

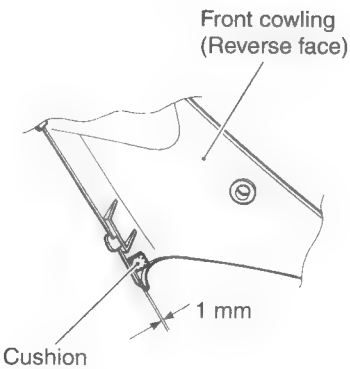

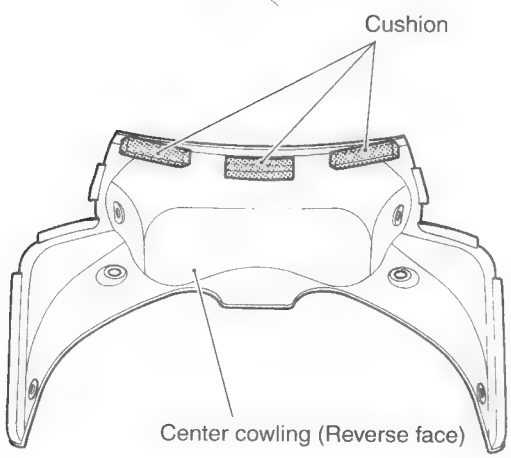

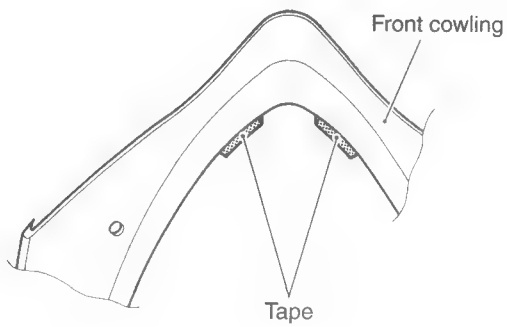

FRONT FENDER CUSHION

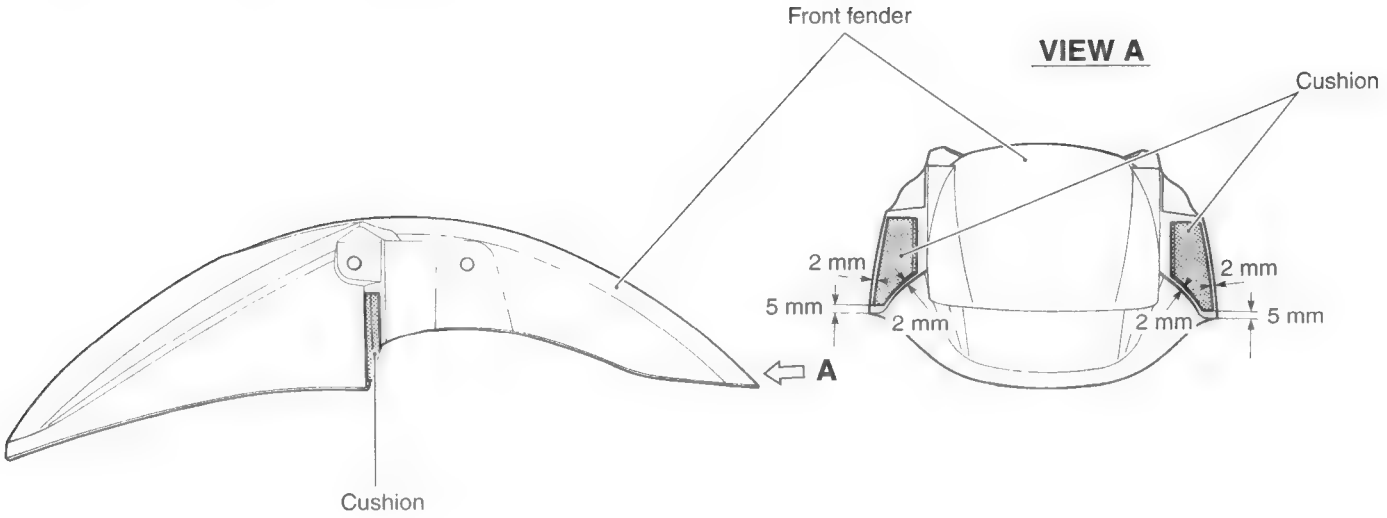

SEAT LOCK CABLE ROUTING

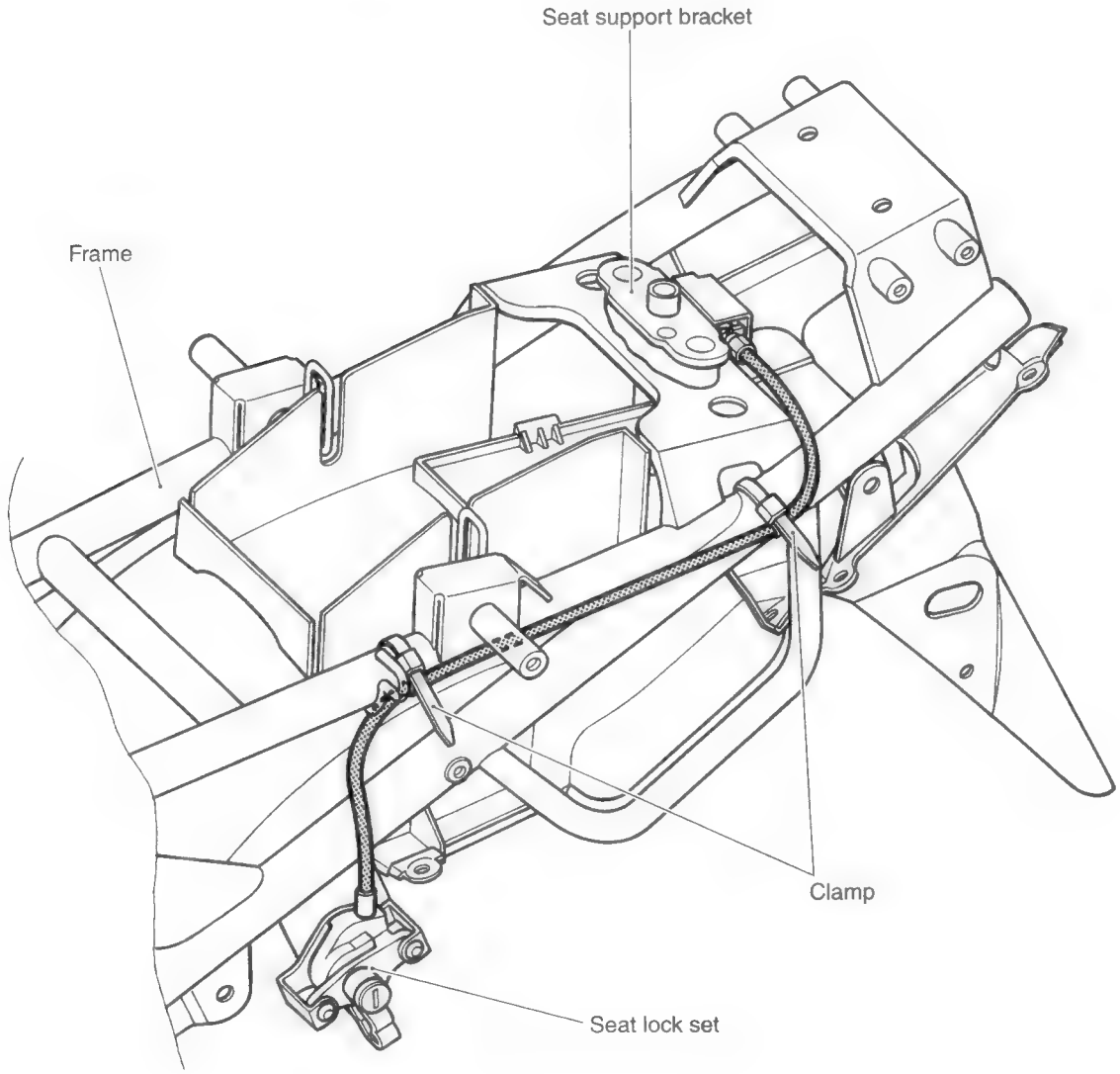

NOTE

NOTE

SPECIAL TOOLS

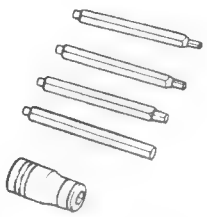 09900-00410 Hexagon wrench set	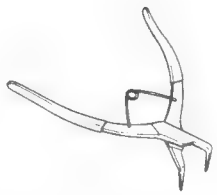 09900-06106 Snap ring pliers	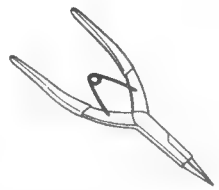 09900-06107 Snap ring pliers	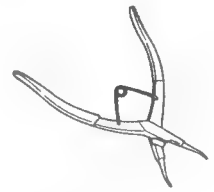 09900-06108 Snap ring pliers	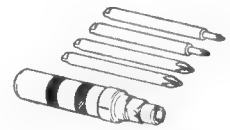 09900-09004 Impact driver set
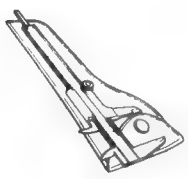 09900-20102 Vernier calipers (1/20 mm, 200 mm)	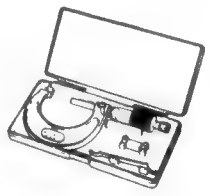 09900-20202 Micrometer (1/100 mm, 25 – 50 mm)	 09900-20203 Micrometer (1/100 mm, 50 – 75 mm)	 09900-20205 Micrometer (1/1000 mm, 0 – 25 mm)	 09900-20508 Cylinder gauge set (1/100 mm, 40 – 80 mm)
 09900-20602 Dial gauge (1/1000 mm)	 09900-20605 Dial calipers (1/100 mm, 10 – 34 mm)	 09900-20606 Dial gauge (1/100 mm)	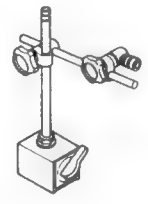 09900-20701 Magnetic stand	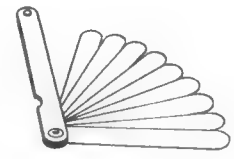 09900-20803 Thickness gauge
 09900-20805 Tire depth gauge	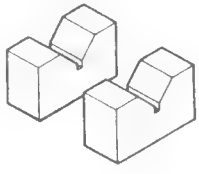 09900-21304 V-block set (100 mm)	 09900-22301 09900-22302 Plastigauge	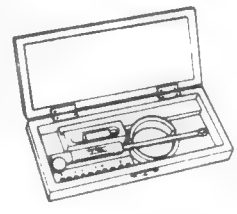 09900-22403 Small bore gauge (18 – 35 mm)	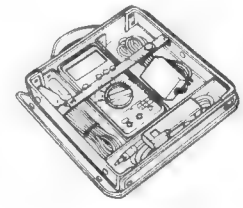 09900-25008 Multi circuit tester set
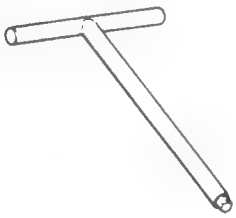 09911-73730 "T" type hexagon wrench (5 mm)	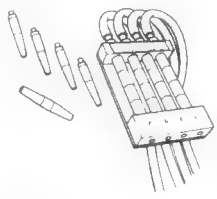 09913-13121 Carburetor balancer	 09913-50121 Oil seal remover	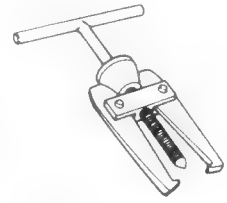 09913-60910 Bearing remover	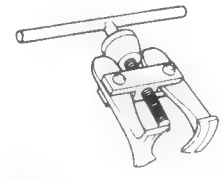 09913-61510 Bearing remover

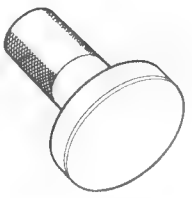 09913-75520 Bearing installer	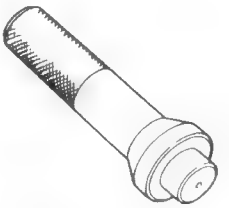 09913-75830 Bearing remover	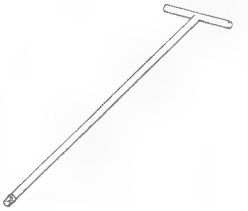 09940-34520 T-handle	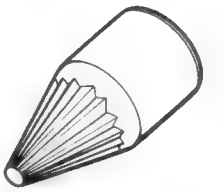 09940-34531 Attachment (A)	 09914-25811 "T" type hexagon wrench (6 mm)
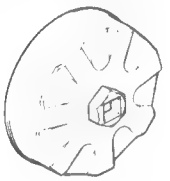 09915-40610 Oil filter wrench	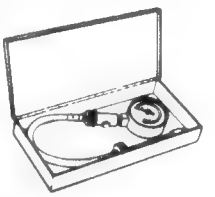 09915-64510 Compression gauge set 09913-10750 (Adaptor)	 09915-74510 Oil pressure gauge 09915-77330 Meter (for high pressure)	 09915-74540 Oil pressure gauge attachment	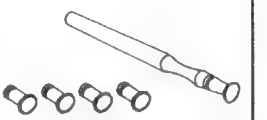 09916-10911 Valve lapper set
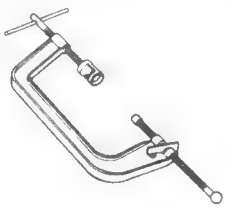 09916-14510 Valve lifter	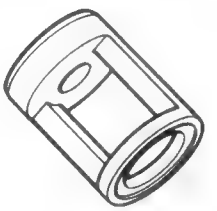 09916-14910 Valve lifter attachment	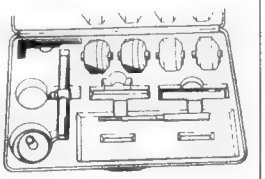 09916-21111 Valve seat cutter set	 Valve seat cutter head (N-125, 212)	 09916-22410 Solid pilot (N-140-5.0)
 09916-24311 Solid pilot (N-100-5.0)	 09916-34570 Valve guide reamer (4.95 mm)	 09916-34542 Valve guide reamer handle	 09916-34580 Valve guide reamer (10.8 mm)	 09916-44310 Valve guide remover/installer
 09916-74521 Holder body	 09916-74530 Band (55 – 65 mm)	 09916-84511 Tweezers	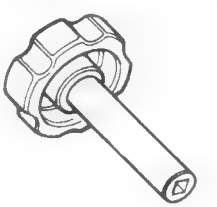 09917-14910 Valve adjuster driver	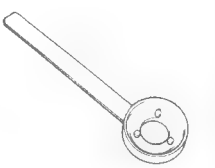 09920-34810 Starter clutch holder

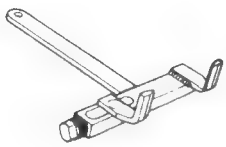 09920-53740 Clutch sleeve hub holder	 09923-73210 Bearing remover	 09923-74510 Bearing remover (20 – 35 mm)	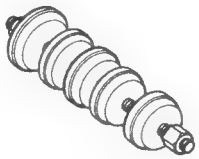 09924-84510 Bearing installer set	 09925-98221 Bearing remover
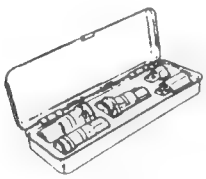 09930-10121 Spark plug wrench set	 09930-11920 Torx bit	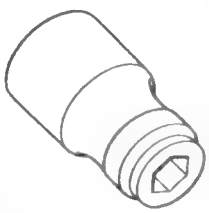 09930-11940 Bit holder	 09930-30102 Sliding shaft	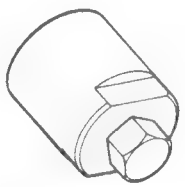 09930-33720 Rotor remover
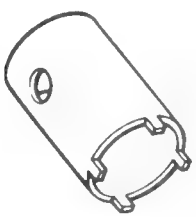 09940-14911 Steering stem nut wrench	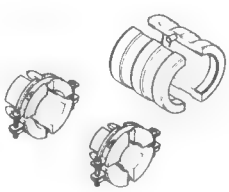 09940-52861 Front fork oil seal installer	 09940-92720 Spring scale	 09941-34513 Steering outer race installer	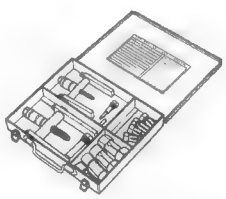 09921-20220 Bearing remover set
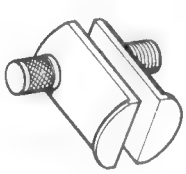 09941-54911 Bearing outer race remover	 09941-74911 Steering bearing installer	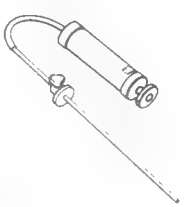 09943-74111 Fork oil level gauge	 09943-88211 Pinion bearing installer	

NOTE: When ordering a special tool, please confirm whether it is available or not.

TIGHTENING TORQUE

ENGINE

ITEM	N·m	kgf·m	lb-ft
Cylinder head cover bolt (10 pcs)	14	1.4	10.0
Cylinder head cover plug	15	1.5	11.0
Cylinder head cover union bolt	16	1.6	11.5
Cylinder head nut [M: 10]	38	3.8	27.5
Cylinder head bolt [M: 6]	10	1.0	7.0
Cylinder head plug	28	2.8	20.0
Cylinder base nut	9	0.9	6.5
Cylinder stud bolt	15	1.5	11.0
Valve clearance adjuster locknut	10	1.0	7.0
Rocker arm shaft set bolt	9	0.9	6.5
Camshaft journal holder bolt	10	1.0	7.0
Cam sprocket bolt	25	2.5	18.0
Oil cooler hose union bolt	23	2.3	16.5
Oil hose mounting bolt	10	1.0	7.0
Cam chain tensioner mounting bolt	7	0.7	5.0
Cam chain tensioner spring holder bolt	35	3.5	25.5
Conrod cap nut	35	3.5	25.5
Starter clutch mounting bolt	150	15.0	108.5
Signal generator rotor bolt	25	2.5	18.0
Crankcase bolt/nut [M: 6]	11	1.1	8.0
[M: 8]	23	2.3	16.5
Main oil gallery plug	40	4.0	29.0
Oil pump mounting bolt	10	1.0	7.0
Oil drain plug	23	2.3	16.5
Oil pan bolt	14	1.4	10.0
Speed sensor rotor bolt	13	1.3	9.5
Clutch sleeve hub nut	95	9.5	68.5
Clutch spring set bolt	12	1.2	8.5
Exhaust pipe bolt	23	2.3	16.5
Muffler mounting bolt	29	2.9	21.0
Engine sprocket nut	115	11.5	83.0
Engine mounting bolt [L: 50 and 55]	55	5.5	40.0
Engine mounting bolt [L: 130 and 175]	75	7.5	54.0
Generator driven gear nut	55	5.5	40.0
Generator mounting bolt	25	2.5	18.0
Oil cooler mounting bolt	10	1.0	7.0
Oil pressure regulator	28	2.8	20.0
Oil pressure switch	14	1.4	10.0
Starter motor mounting bolt	6	0.6	4.5
Starter motor terminal bolt	3	0.3	2.0
Signal generator stator mounting screw	3	0.3	2.0
Starter relay terminal nut	5	0.5	3.5
Spark plug	11	1.1	8.0
Cam chain guide mounting bolt	10	1.0	7.0

CHASSIS

ITEM	N·m	kgf·m	lb-ft
Steering stem head nut	65	6.5	47.0
Front fork upper pinch bolt	23	2.3	16.5
Front fork lower pinch bolt	23	2.3	16.5
Front fork cap bolt	23	2.3	16.5
Front fork cylinder bolt	30	3.0	21.5
Front axle	65	6.5	47.0
Front axle pinch bolt	23	2.3	16.5
Handlebar holder bolt	23	2.3	16.5
Front brake master cylinder holder bolt	10	1.0	7.0
Front brake caliper mounting bolt	39	3.9	28.0
Brake hose union bolt (front & rear)	23	2.3	16.5
Air bleeder valve (front & rear)	8	0.8	6.0
Brake disc bolt (front & rear)	23	2.3	16.5
Front footrest bolt	39	3.9	28.0
Front footrest bracket mounting bolt	23	2.3	16.5
Swingarm pivot nut	100	10.0	72.5
Rear shock absorber mounting nut (upper & lower)	50	5.0	36.0
Cushion lever mounting nut	78	7.8	56.5
Cushion lever rod mounting nut	78	7.8	56.5
Rear brake caliper mounting bolt	25	2.5	18.0
Rear brake caliper housing bolt	30	3.0	21.5
Rear brake master cylinder mounting bolt	23	2.3	16.5
Rear brake master cylinder rod locknut	18	1.8	13.0
Rear axle nut	100	10.0	72.5
Rear sprocket nut	50	5.0	36.0
Rear torque link nut (front & rear)	35	3.5	25.5

TIGHTENING TORQUE CHART

For other bolts and nuts not listed in the preceding page, refer to this chart:

Bolt Diameter Ⓐ (mm)	Conventional or "4" marked bolt			"7" marked bolt		
	N·m	kgf·m	lb-ft	N·m	kgf·m	lb-ft
4	1.5	0.15	1.0	2	0.2	1.5
5	3	0.3	2.0	5	0.5	3.5
6	6	0.6	4.5	10	1.0	7.0
8	13	1.3	9.5	23	2.3	16.5
10	29	2.9	21.0	50	5.0	36.0
12	45	4.5	32.5	85	8.5	61.5
14	65	6.5	47.0	135	13.5	97.5
16	105	10.5	76.0	210	21.0	152.0
18	160	16.0	115.5	240	24.0	173.5

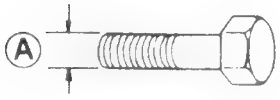

Conventional bolt

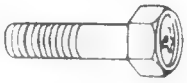

"4" marked bolt

"7" marked bolt

SERVICE DATA

VALVE + GUIDE

Unit: mm (in)

ITEM	STANDARD		LIMIT
Valve diameter	IN.	23 (0.9)	———
	EX.	20 (0.8)	———
Valve clearance (when cold)	IN.	0.10 – 0.15 (0.004 – 0.006)	———
	EX.	0.18 – 0.23 (0.007 – 0.009)	———
Valve-guide to valve-stem clearance	IN.	0.020 – 0.047 (0.0008 – 0.0019)	———
	EX.	0.030 – 0.057 (0.0012 – 0.0022)	———
Valve stem deflection	IN. & EX.	———	0.35 (0.014)
Valve guide I.D.	IN. & EX.	5.000 – 5.012 (0.1969 – 0.1973)	———
Valve stem O.D.	IN.	4.965 – 4.980 (0.1955 – 0.1961)	———
	EX.	4.955 – 4.970 (0.1950 – 0.1957)	———
Valve stem runout	IN. & EX.	———	0.05 (0.002)
Valve face thickness	IN. & EX.	———	0.5 (0.02)
Valve stem end length	IN. & EX.	———	2.5 (0.10)
Valve seat width	IN. & EX.	0.9 – 1.1 (0.035 – 0.043)	———
Valve head radial runout	IN. & EX.	———	0.03 (0.001)
Valve spring free length (IN. & EX.)	INNER	———	35.0 (1.38)
	OUTER	———	38.4 (1.51)
Valve spring tension (IN. & EX.)	INNER	5.6 – 6.6 kgf (12.3 – 14.6 lbs) at length 28 mm (1.10 in)	———
	OUTER	12.8 – 15.0 kgf (28.2 – 33.1 lbs) at length 31.5 mm (1.24 in)	———

CAMSHAFT + CYLINDER HEAD

Unit: mm (in)

ITEM	STANDARD		LIMIT
Cam height	IN.	33.13 – 33.17 (1.3043 – 1.3059)	32.83 (1.2925)
	EX.	32.85 – 32.89 (1.2933 – 1.2949)	32.55 (1.2815)
Camshaft journal oil clearance	IN. & EX.	0.032 – 0.066 (0.0013 – 0.0026)	0.150 (0.0059)
Camshaft journal holder I.D.	IN. & EX.	22.012 – 22.025 (0.8666 – 0.8671)	———
Camshaft journal O.D.	IN. & EX.	21.959 – 21.980 (0.8645 – 0.8654)	———
Camshaft runout	IN. & EX.	———	0.10 (0.004)
Cam chain pin (at arrow "3")	24th pin		———
Rocker arm I.D.	IN. & EX.	12.000 – 12.018 (0.4724 – 0.4731)	———
Rocker arm shaft O.D.	IN. & EX.	11.973 – 11.984 (0.4714 – 0.4718)	———
Cylinder head distortion	———		0.20 (0.008)

CYLINDER + PISTON + PISTON RING

Unit: mm (in)

ITEM	STANDARD			LIMIT
Compression pressure	1 000 – 1 500 kPa (10 – 15 kgf/cm², 142 – 213 psi)			800 kPa (8 kgf/cm², 114 psi)
Compression pressure difference	———			200 kPa (2 kgf/cm², 28 psi)
Piston-to-cylinder clearance	0.040 – 0.050 (0.0016 – 0.0020)			0.120 (0.0047)
Cylinder bore	62.600 – 62.615 (2.4646 – 2.4652)			62.690 (2.4681)
Piston diameter	62.555 – 62.570 (2.4628 – 2.4634) Measure 15 (0.6) from the skirt end.			62.480 (2.4598)
Cylinder distortion	———			0.20 (0.008)
Piston ring free end gap	1st	R	Approx. 6.7 (0.26)	5.4 (0.21)
	2nd	RN	Approx. 7.0 (0.28)	5.6 (0.22)
Piston ring end gap	1st		0.1 – 0.3 (0.004 – 0.012)	0.5 (0.02)
	2nd		0.3 – 0.5 (0.012 – 0.020)	0.7 (0.03)

ITEM	STANDARD		LIMIT
Piston-ring to piston-ring-groove clearance	1st	———	0.180 (0.007)
	2nd	———	0.150 (0.006)
Piston ring groove width	1st	1.02 – 1.04 (0.040 – 0.041)	———
	2nd	0.81 – 0.83 (0.032 – 0.033)	———
	Oil	1.51 – 1.53 (0.059 – 0.060)	———
Piston ring thickness	1st	0.97 – 0.99 (0.038 – 0.039)	———
	2nd	0.77 – 0.79 (0.030 – 0.031)	———
Piston pin bore	18.002 – 18.008 (0.7087 – 0.7090)		18.030 (0.7098)
Piston pin O.D.	17.996 – 18.000 (0.7085 – 0.7086)		17.980 (0.7079)

CONROD + CRANKSHAFT

Unit: mm (in)

ITEM	STANDARD		LIMIT
Conrod small end I.D.	18.010 – 18.018 (0.7091 – 0.7094)		18.040 (0.7102)
Conrod big end side clearance	0.10 – 0.20 (0.004 – 0.008)		0.30 (0.01)
Conrod big end width	20.95 – 21.00 (0.825 – 0.827)		———
Crank pin width	21.10 – 21.15 (0.831 – 0.833)		———
Conrod big end oil clearance	0.032 – 0.056 (0.0013 – 0.0022)		0.080 (0.0031)
Crank pin O.D.	33.976 – 34.000 (1.3376 – 1.3386)		———
Crankshaft journal oil clearance	0.020 – 0.044 (0.0008 – 0.0017)		0.080 (0.0031)
Crankshaft journal O.D.	31.976 – 32.000 (1.2589 – 1.2598)		———
Crankshaft thrust clearance	0.04 – 0.09 (0.002 – 0.004)		———
Crankshaft thrust bearing thickness	Left side	2.350 – 2.500 (0.0925 – 0.0984)	———
	Right side	2.425 – 2.450 (0.0955 – 0.0965)	———
Crankshaft runout	———		0.05 (0.002)

OIL PUMP

ITEM	STANDARD	LIMIT
Oil pump reduction ratio	1.898 (75/43 × 37/34)	———
Oil pressure (at 60°C,140°F)	Above 300 kPa (3.0 kgf/cm², 43 psi) Below 600 kPa (6.0 kgf/cm², 85 psi) at 3 000 r/min.	———

CLUTCH

Unit: mm (in)

ITEM	STANDARD	LIMIT
Clutch cable play	10 – 15 (0.4 – 0.6)	———
Clutch release screw	1/4 turn back	———
Clutch drive plate thickness	2.92 – 3.08 (0.115 – 0.121)	2.62 (0.103)
Clutch drive plate claw width	15.9 – 16.0 (0.626 – 0.630)	15.1 (0.594)
Clutch drive plate distortion	———	0.10 (0.004)
Clutch spring free length	———	47.6 (1.87)

TRANSMISSION + DRIVE CHAIN

Unit: mm (in) Except ratio

ITEM		STANDARD		LIMIT
Primary reduction ratio		1.744 (75/43)		———
Final reduction ratio		3.133 (47/15)		———
Gear ratios	1st (low)	3.083 (37/12)		———
	2nd	2.062 (33/16)		———
	3rd	1.647 (28/17)		———
	4th	1.400 (28/20)		———
	5th	1.227 (27/22)		———
	6th (top)	1.095 (23/21)		———
Gearshift-fork to gearshift-fork-groove clearance		No.1, No.2 & No.3	0.1 – 0.3 (0.004 – 0.012)	0.50 (0.020)
Gearshift fork groove width		No.1 & No.3	4.8 – 4.9 (0.189 – 0.193)	———
		No.2	5.0 – 5.1 (0.197 – 0.201)	———
Gearshift fork thickness		No.1 & No.3	4.6 – 4.7 (0.181 – 0.185)	———
		No.2	4.8 – 4.9 (0.189 – 0.193)	———
Drive chain		Type	RK50MFOZ1	———
		Links	112 links	———
		20-pitch length	———	319.4 (12.57)
Drive chain slack		25 – 35 (0.98 – 1.38)		———
Gearshift lever height		55 (2.2)		———

CARBURETOR

ITEM	SPECIFICATION	
	E-02, 19	E-03, 28
Carburetor type	KEIHIN CVR32SS	←
Bore size	32 mm	←
I.D. No.	31F0	31F2
Idle r/min.	1 200 ± 100 r/min.	←
Float height	17.0 ± 1.0 mm (0.67 ± 0.04 in)	←
Main jet (M.J.)	#92	←
Jet needle (J.N.)	N1QL	←
Needle jet (N.J.)	ϕ 3.4	←
Throttle valve (Th.V)	11°	←
Pilot jet (P.J.)	#35	←
Pilot screw (P.S.)	PRE-SET (1¾ turns back)	PRE-SET (1⅞ turns back)
Throttle cable play (pulling cable)	2.0 – 4.0 mm (0.08 – 0.16 in)	←
Starter (enricher) plunger cable play	0.5 – 1.0 mm (0.02 – 0.04 in)	←

CARBURETOR

ITEM	SPECIFICATION	
	E-19 (U-type)	E-33
Carburetor type	KEIHIN CVR32SS	←
Bore size	32 mm	←
I.D. No.	31F1	31F3
Idle r/min.	1 200 ± 100 r/min.	←
Float height	17.0 ± 1.0 mm (0.67 ± 0.04 in)	←
Main jet (M.J.)	#92	←
Jet needle (J.N.)	N1QL	←
Needle jet (N.J.)	ϕ 3.4	←
Throttle valve (Th.V)	11°	←
Pilot jet (P.J.)	#35	←
Pilot screw (P.S.)	PRE-SET (1⅞ turns back)	←
Throttle cable play (pulling cable)	2.0 – 4.0 mm (0.08 – 0.16 in)	←
Starter (enricher) plunger cable play	0.5 – 1.0 mm (0.02 – 0.04 in)	←

ELECTRICAL

Unit: mm (in)

ITEM			SPECIFICATION		NOTE
Ignition timing			4° B.T.D.C. at 1 200 r/min.		E-03, 28, 33
			13° B.T.D.C. at 1 500 r/min.		The other countries
Firing order			1•2•4•3		
Spark plug			Type	NGK: CR9EK DENSO: U27ETR	
			Gap	0.6 – 0.7 (0.024 – 0.028)	
Spark performance			Over 8 (0.3) at 1 atm.		
Pickup coil resistance			Approx. 135 – 200 Ω		Tester range: (× 100 Ω)
Signal generator peak voltage			More than 1.0 V		
Ignition coil resistance			Primary	⊕ tap – ⊖ tap Approx. 2 – 4 Ω	Tester range: (× 1 Ω)
			Secondary	Spark plug cap – Spark plug cap Approx. 30 – 40 kΩ	Tester range: (× 1 kΩ)
Ignition coil primary peak voltage			More than 140 V		
Generator			Slip ring O.D.	Limit: 14.0 (0.55)	DENSO
			Brush length	Limit: 4.5 (0.18)	
Generator maximum output			More than 550 W at 5 000 r/min.		
Regulated voltage			13.6 – 14.4 V at 5 000 r/min.		
Starter relay resistance			3 – 6 Ω		
Battery	Type designation		YTX9-BS		
	Capacity		12V 28.8 kC (8 Ah)/10HR		
	Standard electrolyte S.G.		1.320 at 20°C (68°F)		
Fuse size	Headlight	HI	15 A		
		LO	15 A		
	Turn signal		15 A		
	Ignition		10 A		
	Taillight		10 A		
	Main		30 A		

WATTAGE

Unit: W

ITEM		SPECIFICATION	
		E-03, 28, 33	The other countries
Headlight	HI	60	←
	LO	51	←
Parking or position light			5
Brake light/Taillight		21/5 × 2	←
Turn signal light		21 × 4	←
Speedometer light		LED	←
Tachometer light		LED	←
Turn signal indicator light		LED × 2	←
High beam indicator light		LED	←
Neutral position indicator light		LED	←
Oil pressure indicator light		LED	←
License plate light		5	←

BRAKE + WHEEL

Unit: mm (in)

ITEM	STANDARD		LIMIT
Rear brake pedal height	50 (2.0)		———
Brake disc thickness	Front	4.5 ± 0.2 (0.177 ± 0.008)	4.0 (0.16)
	Rear	5.0 ± 0.2 (0.197 ± 0.008)	4.5 (0.18)
Brake disc runout	———		0.30 (0.012)
Master cylinder bore	Front	15.870 – 15.913 (0.6248 – 0.6264)	———
	Rear	12.700 – 12.743 (0.5000 – 0.5017)	———
Master cylinder piston diameter	Front	15.827 – 15.854 (0.6231 – 0.6242)	———
	Rear	12.657 – 12.684 (0.4983 – 0.4994)	———
Brake caliper cylinder bore	Front	30.230 – 30.306 (1.1902 – 1.1931)	———
	Rear	38.180 – 38.256 (1.5031 – 1.5061)	———
Brake caliper piston diameter	Front	30.150 – 30.200 (1.1870 – 1.1890)	———
	Rear	38.098 – 38.148 (1.5000 – 1.5019)	———

ITEM	STANDARD		LIMIT
Wheel rim runout	Axial	———	2.0 (0.08)
	Radial	———	2.0 (0.08)
Wheel axle runout	Front	———	0.25 (0.010)
	Rear	———	0.25 (0.010)
Wheel rim size	Front	J17 × MT3.50	———
	Rear	J17 × MT4.50	———

SUSPENSION

Unit: mm (in)

ITEM	STANDARD	LIMIT	NOTE
Front fork stroke	130 (5.1)	———	
Front fork spring free length	———	356 (14.0)	
Front fork oil level	116 (4.6)	———	E-03, 28, 33
	112 (4.4)	———	The other countries
Rear wheel travel	126 (5.0)	———	
Swingarm pivot shaft runout	———	0.3 (0.01)	

TIRE

ITEM	STANDARD		LIMIT
Cold inflation tire pressure (Solo/Dual riding)	Front	225 kPa (2.25 kgf/cm^2, 33 psi)	———
	Rear	250 kPa (2.50 kgf/cm^2, 36 psi)	———
Tire size	Front	120/60 ZR17 (55W)	———
	Rear	160/60 ZR17 (69W)	———
Tire type	Front	BRIDGESTONE BT56F	———
	Rear	BRIDGESTONE BT56R	———
Tire tread depth (Recommended depth)	Front	———	1.6 mm (0.06 in)
	Rear	———	2.0 mm (0.08 in)

FUEL + OIL

ITEM	SPECIFICATION		NOTE
Fuel type	Use only unleaded gasoline of at least 87 pump octane or 91 octane ($\frac{R+M}{2}$) or higher rated by the Research Method. Gasoline containing MTBE (Methyl Tertiary Butyl Ether), less than 10% ethanol, or less than 5% methanol with appropriate cosolvents and corrosion inhibitor is permissible.		E-03, 28, 33
	Gasoline used should be graded 91 octane or higher. An unleaded gasoline is recommended.		The other countries
Fuel tank capacity	Including reserve	19 L (5.0/4.2 US/Imp gal)	E-33
		20 L (5.3/4.4 US/Imp gal)	The other countries
	Reserve only	4.5 L (1.2/1.0 US/Imp gal)	
Engine oil type	SAE 10W/40, API SF or SG		
Engine oil capacity	Change	3 300 ml (3.5/2.9 US/Imp qt)	
	Filter change	3 500 ml (3.7/3.1 US/Imp qt)	
	Overhaul	4 600 ml (4.9/4.0 US/Imp qt)	
Front fork oil type	Fork oil #10		
Front fork oil capacity (each leg)	506 ml (17.1/17.8 US/Imp oz)		E-03, 28, 33
	510 ml (17.2/18.0 US/Imp oz)		The other countries
Brake fluid type	DOT 4		

GSF600Y (2000-MODEL)

This chapter describes service data, service specifications and servicing procedures which differ from those of the GSF600SY (2000-model).

NOTE:
- *Any differences between the GSF600SY (2000-model) and GSF600Y (2000-model) in specifications and service data are indicated with an asterisk mark (*).*
- *Please refer to the chapters 1 through 7 for details which are not given in this chapter.*

CONTENTS

SPECIFICATIONS ***8- 2***
COMBINATION METER ***8- 4***
HEADLIGHT ***8- 7***
HEADLIGHT BEAM ADJUSTMENT ***8- 8***
WIRING DIAGRAM ***8- 9***
WIRE HARNESS ROUTING ***8-10***
FRONT BRAKE HOSE ROUTING ***8-12***
SERVICE DATA ***8-13***

COUNTRY AND AREA CODES

The following codes stand for the applicable country(-ies) and area(-s).

CODE	COUNTRY or AREA
E-02	U.K.
E-19	European markets

SPECIFICATIONS

DIMENSIONS AND DRY MASS

Overall length	*	2 130 mm (83.9 in)
Overall width		770 mm (30.3 in)
Overall height	*	1 095 mm (43.1 in)
Wheelbase		1 440 mm (56.7 in)
Ground clearance		130 mm (5.1 in)
Seat height		790 mm (31.1 in)
Dry mass	*	204 kg (449 lbs)

ENGINE

Type	Four-stroke, air-cooled, with SACS, DOHC, TSCC
Number of cylinders	4
Bore	62.6 mm (2.465 in)
Stroke	48.7 mm (1.917 in)
Piston displacement	600 cm^3 (36.6 cu.in)
Compression ratio	11.3 : 1
Carburetor type (number of carburetors)	KEIHIN CVR32 (Four)
Air cleaner	Non-woven fabric element
Starter system	Electric starter
Lubrication system	Wet sump

TRANSMISSION

Clutch	Wet multi-plate type
Transmission	6-speed constant mesh
Gearshift pattern	1-down, 5-up
Primary reduction ratio	1.744 (75/43)
Final reduction ratio	3.133 (47/15)
Gear ratios, 1st (low)	3.083 (37/12)
2nd	2.062 (33/16)
3rd	1.647 (28/17)
4th	1.400 (28/20)
5th	1.227 (27/22)
6th (top)	1.095 (23/21)
Drive chain	RK50MFOZ1, 112 links

CHASSIS

Front suspension		Telescopic, coil spring, oil damped
Rear suspension		Link type, coil spring, oil damped, spring pre-load 7-way adjustable, rebound damping force 4-way adjustable
Steering angle		35° (right & left)
Caster	*	24° 55'
Trail	*	99 mm (3.9 in)
Turning radius		2.8 m (9.2 ft)
Front brake		Disc brake, twin
Rear brake		Disc brake
Front tire size		120/60 ZR17 (55W), tubeless
Rear tire size		160/60 ZR17 (69W), tubeless
Front fork stroke		130 mm (5.1 in)
Rear wheel travel		126 mm (5.0 in)

ELECTRICAL

Ignition type		Electronic ignition (Transistorized)
Ignition timing		13° B.T.D.C. at 1 500 r/min
Spark plug		NGK CR9EK or DENSO U27ETR
Battery		12 V 28.8 kC (8 Ah)/10HR
Generator		Three-phase A.C. generator
Main fuse		30 A
Fuse		15/15/15/10/10 A
Headlight	*	12 V 60/55 W (H4)
Position light		12 V 5 W
Turn signal light		12 V 21 W × 4
Brake light/Taillight		12 V 21/5 W × 2
Speedometer light		LED
Tachometer light		LED
Neutral indicator light		LED
High beam indicator light		LED
Turn signal indicator light		LED × 2
Oil pressure indicator light		LED
License plate light		12 V 5 W

CAPACITIES

Fuel tank, including reserve		20.0 L (5.3/4.4 US/Imp gal)
reserve		4.5 L (1.2/1.0 US/Imp gal)
Engine oil, oil change		3 300 ml (3.5/2.9 US/Imp qt)
oil and filter change		3 500 ml (3.7/3.1 US/Imp qt)
engine overhaul		4 600 ml (4.9/4.0 US/Imp qt)
Front fork oil (each leg)	*	508 ml (17.2/17.9 US/Imp oz)

These specifications are subject to change without notice.

COMBINATION METER

REMOVAL

- Remove the headlight with two screws.

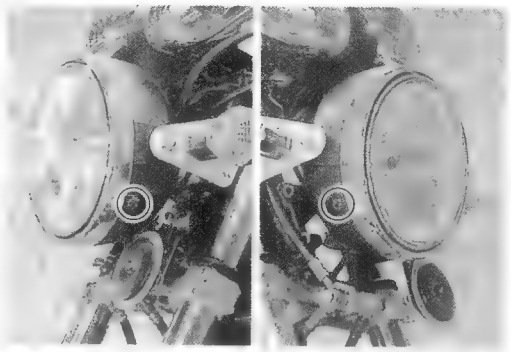

- Disconnect the socket ① and coupler ②.

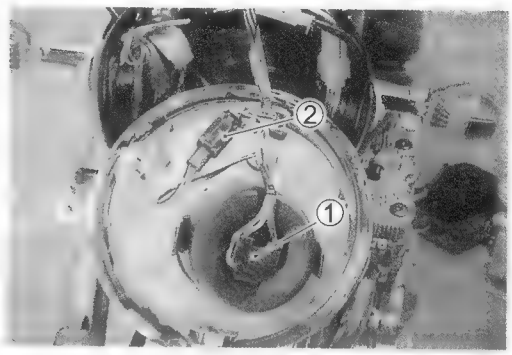

- Remove the lead wires from the two clamps and disconnect the all lead wire couplers.

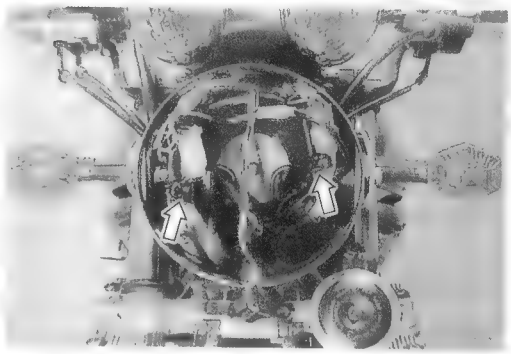

- Remove the headlight housing ③ by removing the headlight housing bolts.

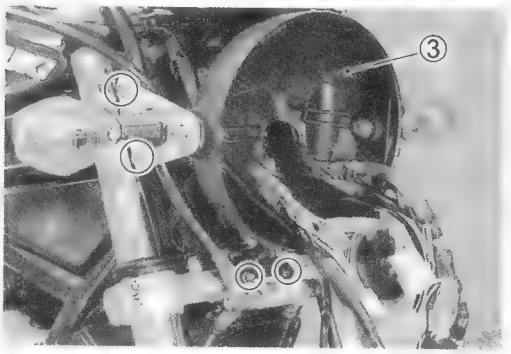

- Remove the combination meter ④ by removing the two bolts.

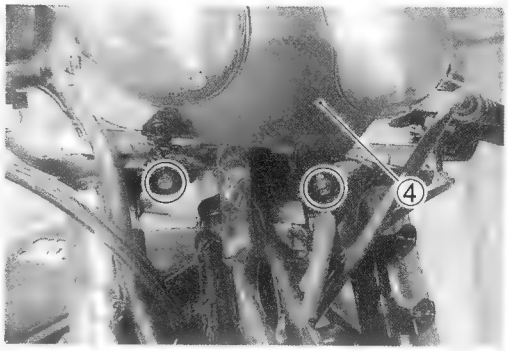

- Remove the headlight housing bracket ⑤ by removing the front fork. (☞5-13)
- Reassemble and remount the combination meter in the reverse order of removal and disassembly.

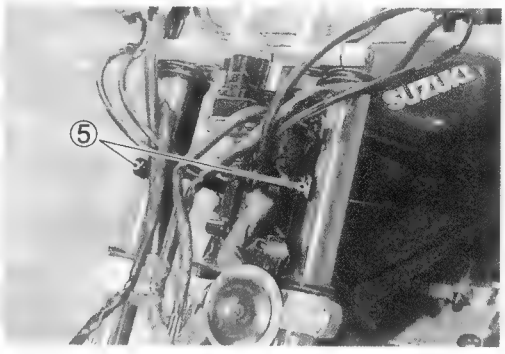

DISASSEMBLY

- Disassemble the combination meter as follows.

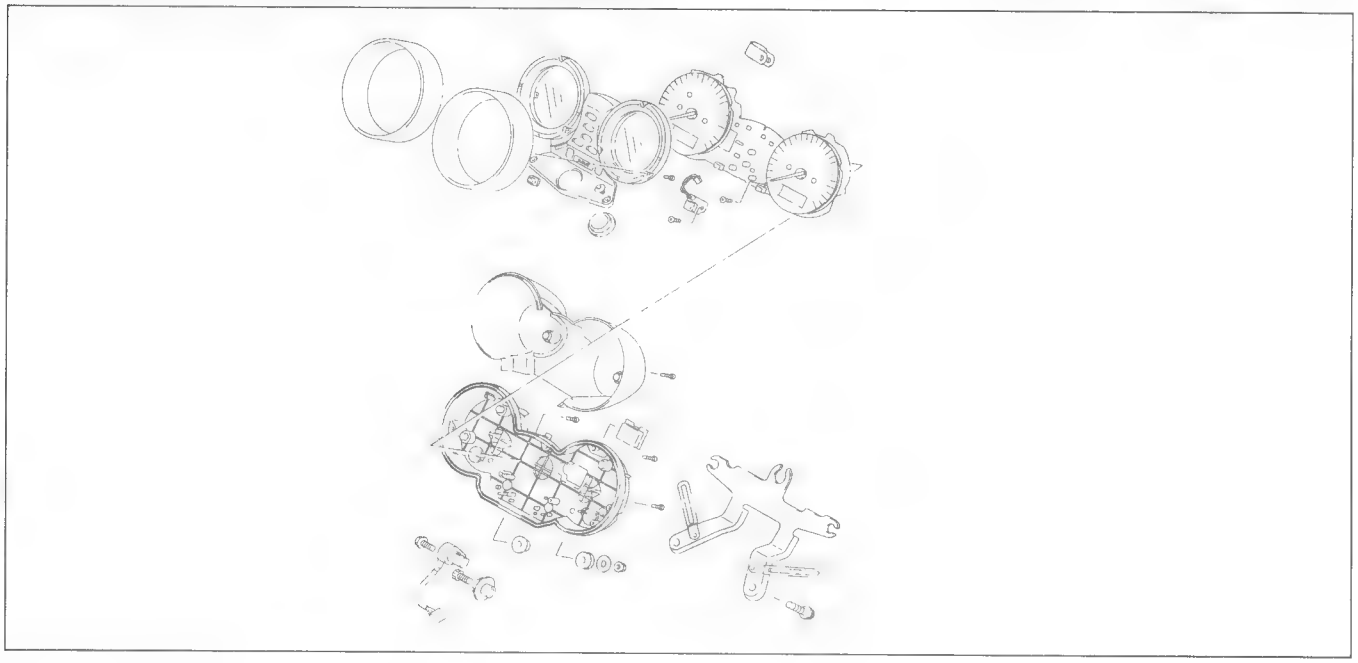

INSPECTION

Measure the continuity between the lead wires in the diagram on the next page using a tester.
If there is no continuity, replace the combination meter assy.

NOTE:
When performing this test, it is not necessary to remove the combination meter.

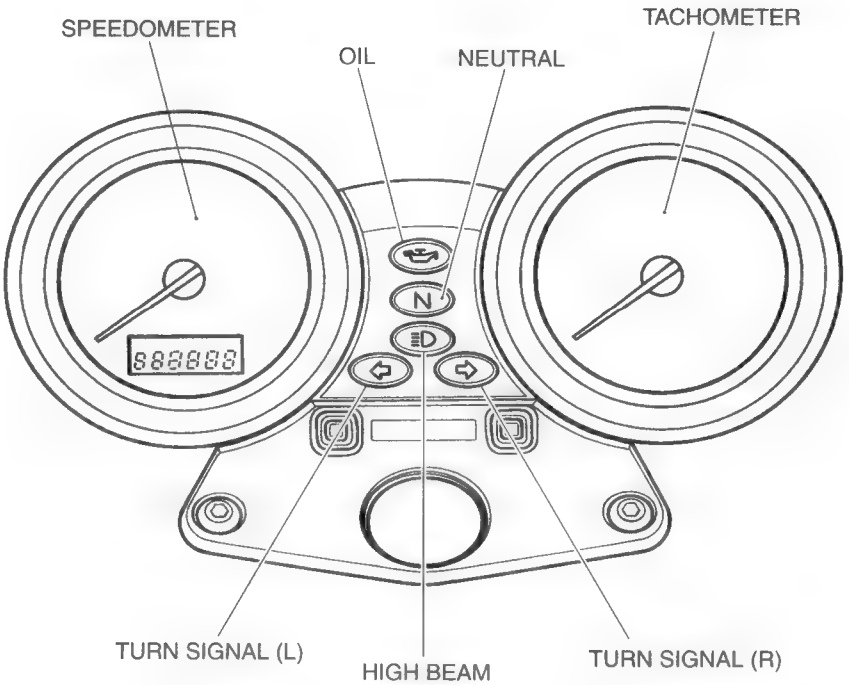

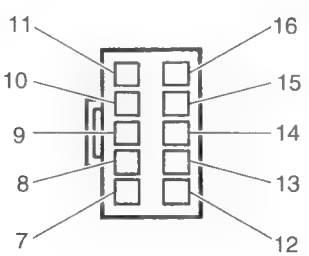

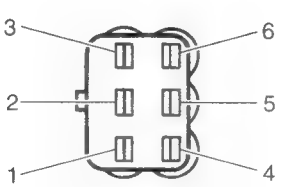

ITEM	⊕ Probe of tester to:	⊖ Probe of tester to:
ILLUMINATION	7	10
TURN (R)	8	10
TURN (L)	13	10
NEUTRAL	14	11
HIGH BEAM	12	10
OIL	14	3

1: SPEEDOMETER
2: TACHOMETER
3: OIL ⊖
4: SPEEDOMETER
5: BATTERY ⊕
6: Blank
7: ILLUMINATION ⊕
8: TURN (R) ⊕
9: Blank
10: GROUND (PILOT LAMP)
11: NEUTRAL ⊖
12: HIGH BEAM ⊕
13: TURN (L) ⊕
14: IGNITION
15: Blank
16: GROUND (TACHOMETER)

HEADLIGHT

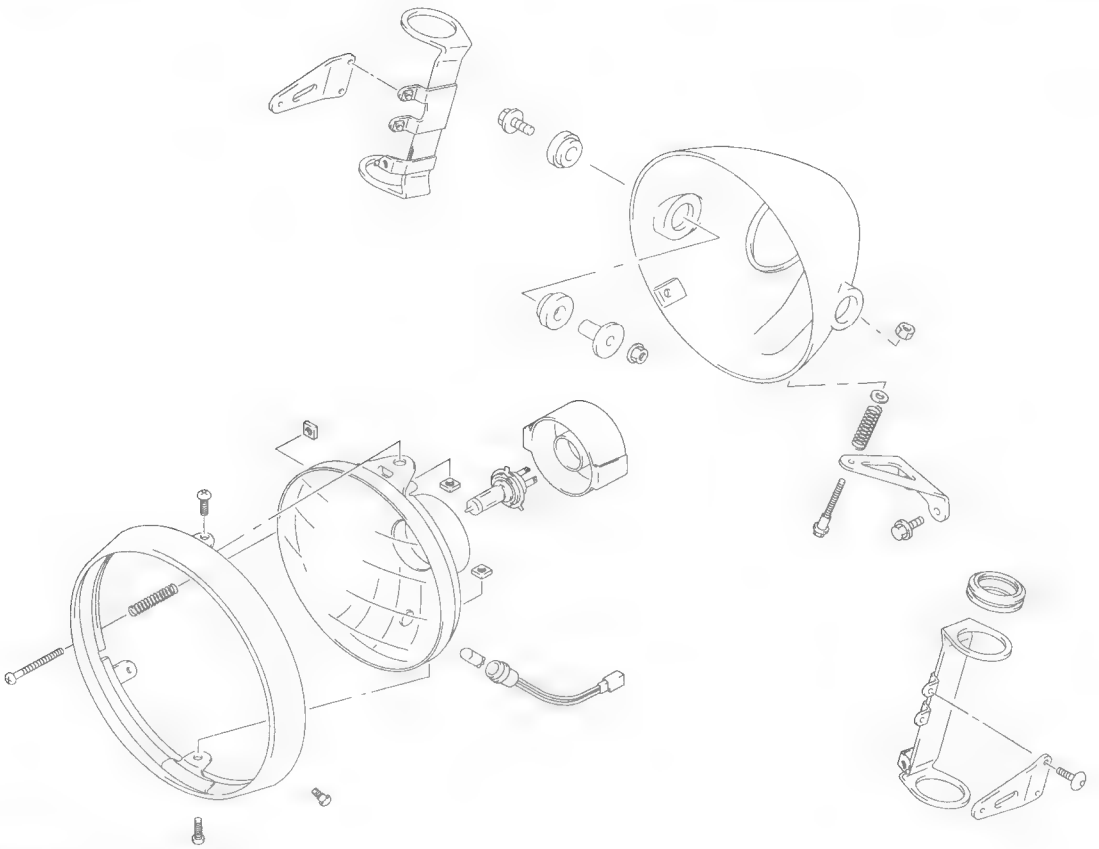

Headlight bulb: 12 V 60/55 W
Position light bulb: 12 V 5 W

NOTE:
Adjust the headlight (vertically and horizontally) after reassembling

BULB REPLACEMENT

- Remove the headlight with two screws. (☞8-4)
- Disconnect the socket and coupler. (☞8-4)

- Remove the rubber cap ①.
- Pull out the position light ②.

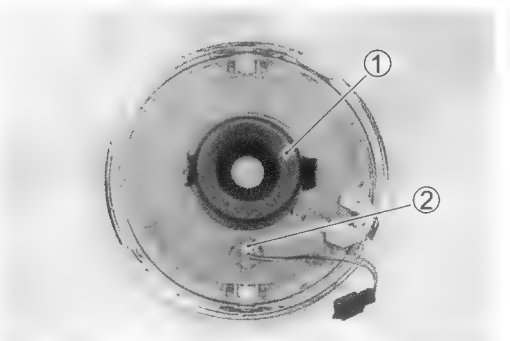

- Unlock the bulb holder spring ③ and pull out the bulb ④.
- Reassemble the headlight in the reverse order of disassembly.

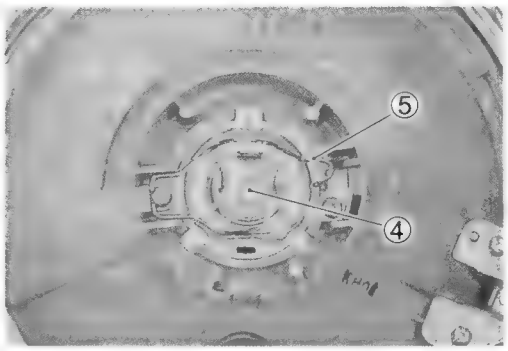

HEADLIGHT BEAM ADJUSTMENT

To adjust the beam horizontally:
Turn the adjuster ① clockwise or counterclockwise.

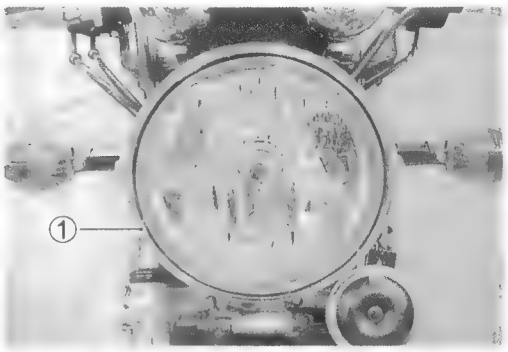

To adjust the beam vertically:
Turn the adjuster ② clockwise or counterclockwise.

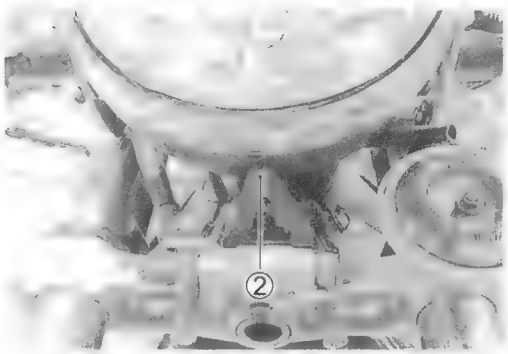

WIRING DIAGRAM

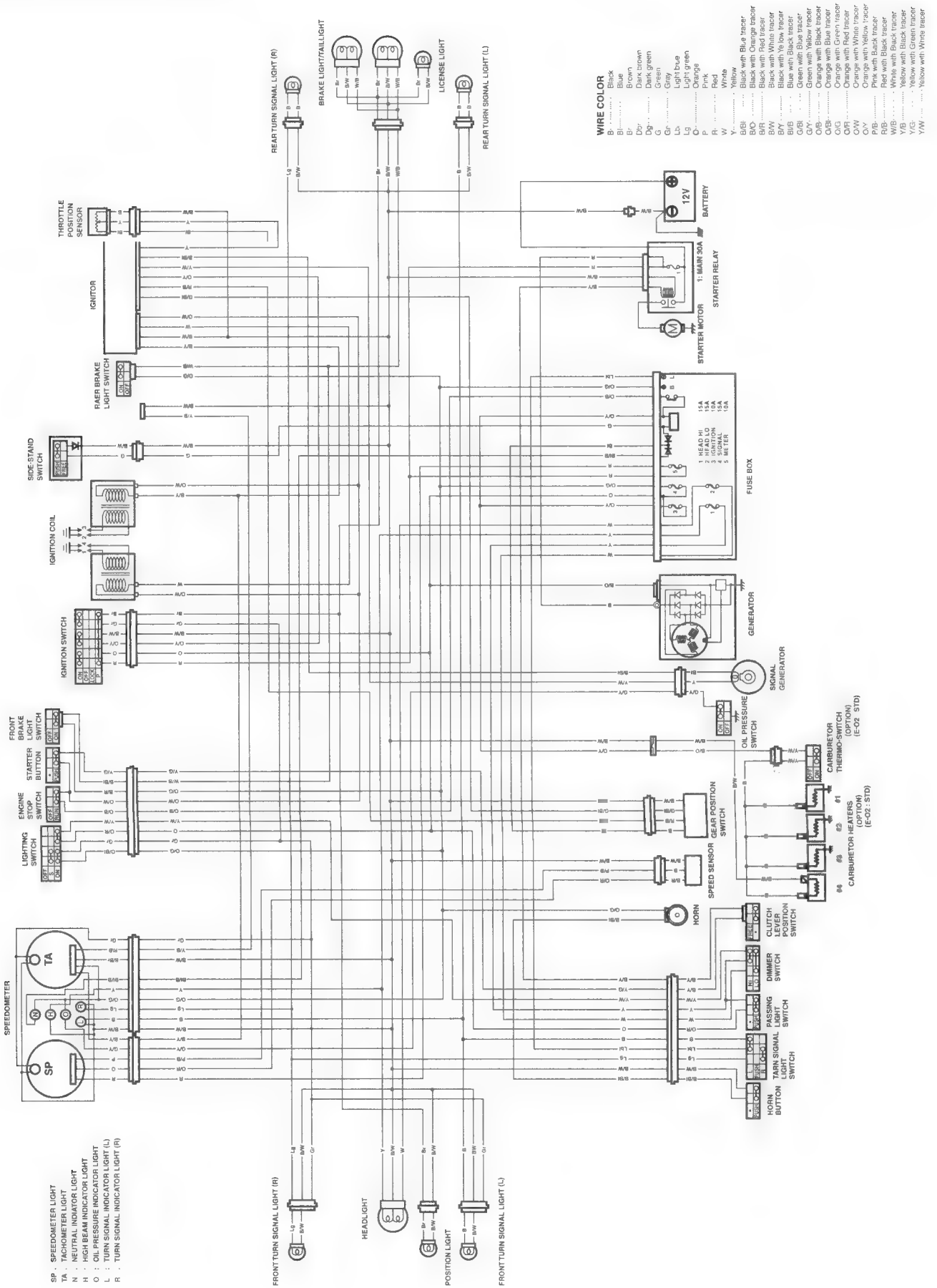

WIRE HARNESS ROUTING

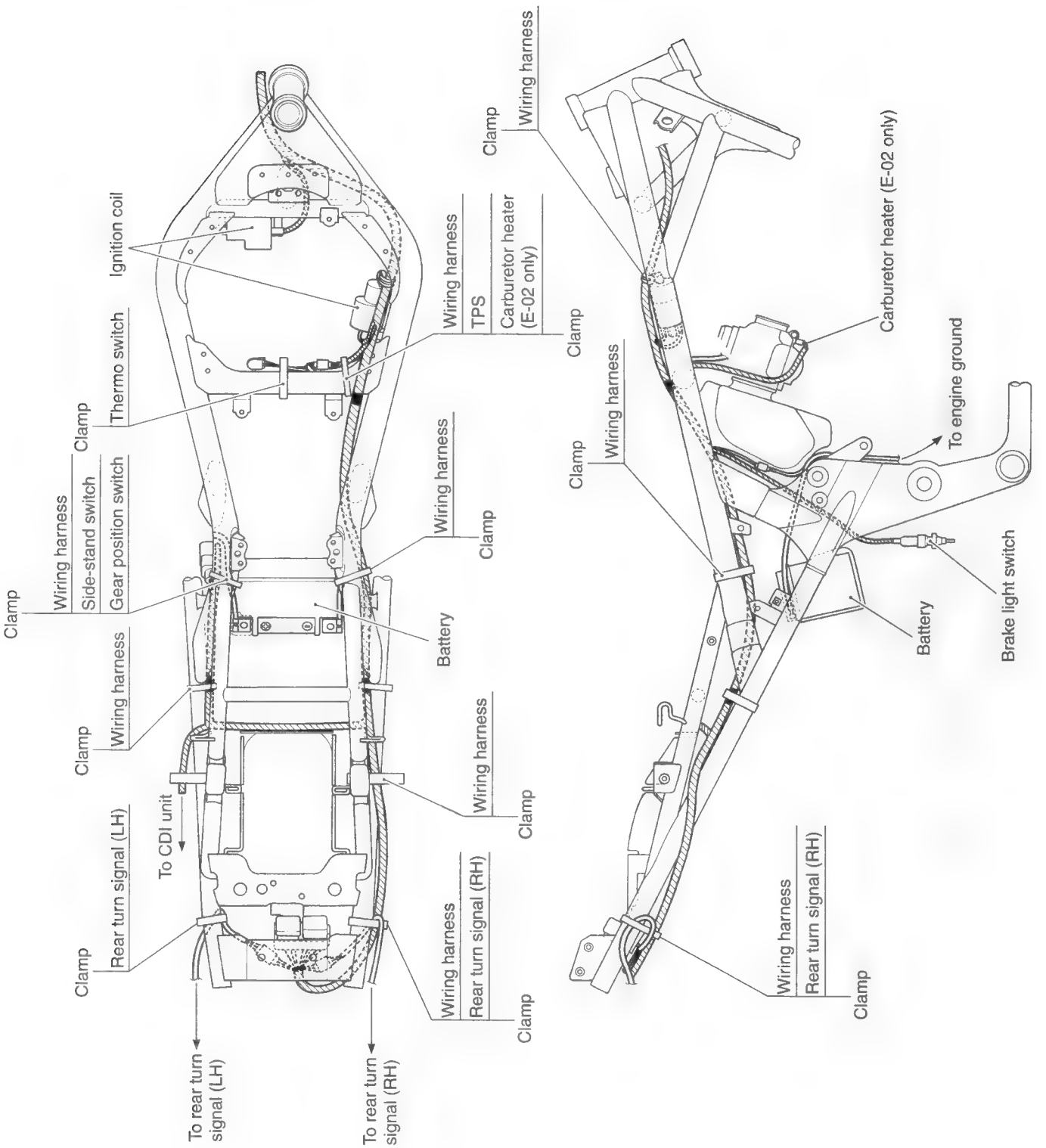

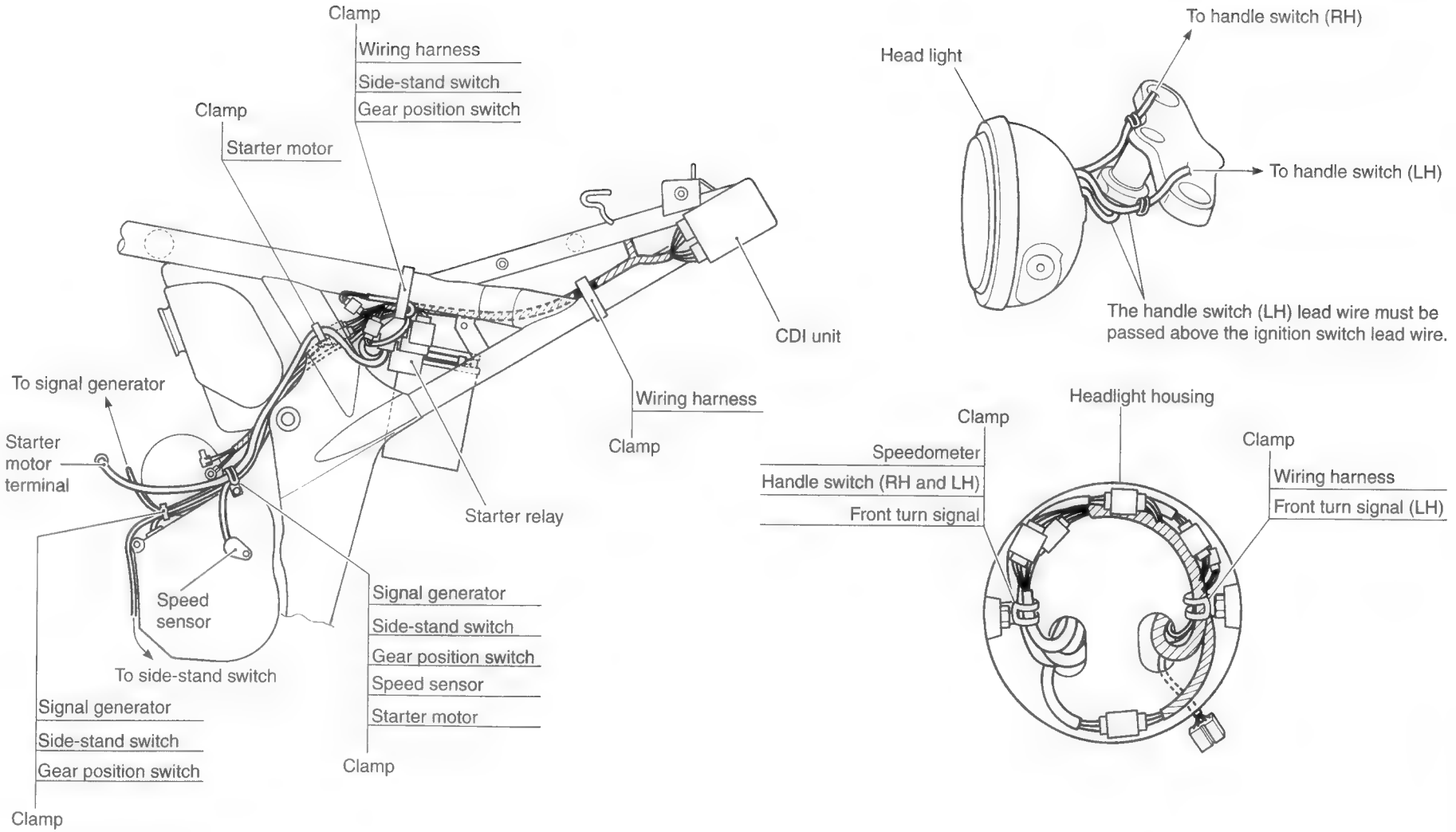
Clamp
Wiring harness
Side-stand switch
Gear position switch
Clamp
Starter motor
CDI unit
Wiring harness
Clamp
To signal generator
Starter motor terminal
Starter relay
Speed sensor
To side-stand switch
Signal generator
Side-stand switch
Gear position switch
Clamp
Signal generator
Side-stand switch
Gear position switch
Speed sensor
Starter motor
Clamp
To handle switch (RH)
Head light
To handle switch (LH)
The handle switch (LH) lead wire must be passed above the ignition switch lead wire.
Headlight housing
Clamp
Speedometer
Handle switch (RH and LH)
Front turn signal
Clamp
Wiring harness
Front turn signal (LH)

FRONT BRAKE HOSE ROUTING

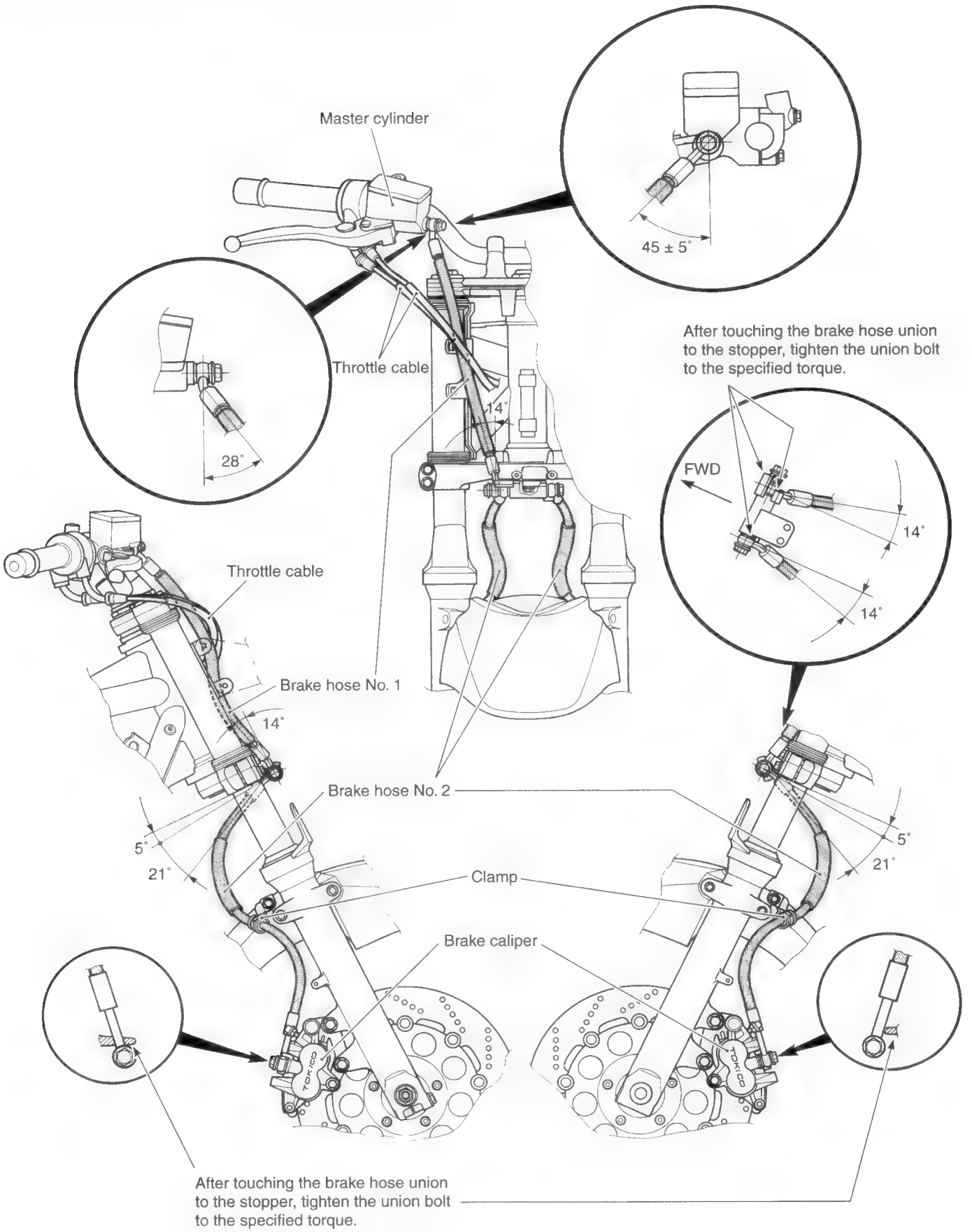

SERVICE DATA

VALVE + GUIDE

Unit: mm (in)

ITEM	STANDARD		LIMIT
Valve diameter	IN.	23 (0.9)	———
	EX.	20 (0.8)	———
Valve clearance (when cold)	IN.	0.10 – 0.15 (0.004 – 0.006)	———
	EX.	0.18 – 0.23 (0.007 – 0.009)	———
Valve-guide to valve-stem clearance	IN.	0.020 – 0.047 (0.0008 – 0.0019)	———
	EX.	0.030 – 0.057 (0.0012 – 0.0022)	———
Valve stem deflection	IN. & EX.	———	0.35 (0.014)
Valve guide I.D.	IN. & EX.	5.000 – 5.012 (0.1969 – 0.1973)	———
Valve stem O.D.	IN.	4.965 – 4.980 (0.1955 – 0.1961)	———
	EX.	4.955 – 4.970 (0.1950 – 0.1957)	———
Valve stem runout	IN. & EX.	———	0.05 (0.002)
Valve face thickness	IN. & EX.	———	0.5 (0.02)
Valve stem end length	IN. & EX.	———	2.5 (0.10)
Valve seat width	IN. & EX.	0.9 – 1.1 (0.035 – 0.043)	———
Valve head radial runout	IN. & EX.	———	0.03 (0.001)
Valve spring free length (IN. & EX.)	INNER	———	35.0 (1.38)
	OUTER	———	38.4 (1.51)
Valve spring tension (IN. & EX.)	INNER	5.6 – 6.6 kgf (12.3 – 14.6 lbs) at length 28 mm (1.10 in)	———
	OUTER	12.8 – 15.0 kgf (28.2 – 33.1 lbs) at length 31.5 mm (1.24 in)	———

CAMSHAFT + CYLINDER HEAD

Unit: mm (in)

ITEM	STANDARD		LIMIT
Cam height	IN.	33.13 – 33.17 (1.3043 – 1.3059)	32.83 (1.2925)
	EX.	32.85 – 32.89 (1.2933 – 1.2949)	32.55 (1.2815)
Camshaft journal oil clearance	IN. & EX.	0.032 – 0.066 (0.0013 – 0.0026)	0.150 (0.0059)
Camshaft journal holder I.D.	IN. & EX.	22.012 – 22.025 (0.8666 – 0.8671)	———
Camshaft journal O.D.	IN. & EX.	21.959 – 21.980 (0.8645 – 0.8654)	———
Camshaft runout	IN. & EX.	———	0.10 (0.004)
Cam chain pin (at arrow "3")	24th pin		———
Rocker arm I.D.	IN. & EX.	12.000 – 12.018 (0.4724 – 0.4731)	———
Rocker arm shaft O.D.	IN. & EX.	11.973 – 11.984 (0.4714 – 0.4718)	———
Cylinder head distortion	———		0.20 (0.008)

CYLINDER + PISTON + PISTON RING

Unit: mm (in)

ITEM	STANDARD			LIMIT
Compression pressure	1 000 – 1 500 kPa (10 – 15 kgf/cm²) (142 – 213 psi)			800 kPa (8 kgf/cm²) (114 psi)
Compression pressure difference	———			200 kPa (2 kgf/cm²) (28 psi)
Piston-to-cylinder clearance	0.040 – 0.050 (0.0016 – 0.0020)			0.120 (0.0047)
Cylinder bore	62.600 – 62.615 (2.4646 – 2.4652)			62.690 (2.4681)
Piston diameter	62.555 – 62.570 (2.4628 – 2.4634) Measure 15 (0.6) from the skirt end.			62.480 (2.4598)
Cylinder distortion	———			0.20 (0.008)
Piston ring free end gap	1st	R	Approx. 6.7 (0.26)	5.4 (0.21)
	2nd	RN	Approx. 7.0 (0.28)	5.6 (0.22)
Piston ring end gap	1st		0.1 – 0.3 (0.004 – 0.012)	0.5 (0.02)
	2nd		0.3 – 0.5 (0.012 – 0.020)	0.7 (0.03)

ITEM	STANDARD		LIMIT
Piston-ring to piston-ring-groove clearance	1st	———	0.180 (0.007)
	2nd	———	0.150 (0.006)
Piston ring groove width	1st	1.02 – 1.04 (0.040 – 0.041)	———
	2nd	0.81 – 0.83 (0.032 – 0.033)	———
	Oil	1.51 – 1.53 (0.059 – 0.060)	———
Piston ring thickness	1st	0.97 – 0.99 (0.038 – 0.039)	———
	2nd	0.77 – 0.79 (0.030 – 0.031)	———
Piston pin bore	18.002 – 18.008 (0.7087 – 0.7090)		18.030 (0.7098)
Piston pin O.D.	17.996 – 18.000 (0.7085 – 0.7086)		17.980 (0.7079)

CONROD + CRANKSHAFT

Unit: mm (in)

ITEM	STANDARD		LIMIT
Conrod small end I.D.	18.010 – 18.018 (0.7091 – 0.7094)		18.040 (0.7102)
Conrod big end side clearance	0.10 – 0.20 (0.004 – 0.008)		0.30 (0.01)
Conrod big end width	20.95 – 21.00 (0.825 – 0.827)		———
Crank pin width	21.10 – 21.15 (0.831 – 0.833)		———
Conrod big end oil clearance	0.032 – 0.056 (0.0013 – 0.0022)		0.080 (0.0031)
Crank pin O.D.	33.976 – 34.000 (1.3376 – 1.3386)		———
Crankshaft journal oil clearance	0.020 – 0.044 (0.0008 – 0.0017)		0.080 (0.0031)
Crankshaft journal O.D.	31.976 – 32.000 (1.2589 – 1.2598)		———
Crankshaft thrust clearance	0.04 – 0.09 (0.002 – 0.004)		———
Crankshaft thrust bearing thickness	Left side	2.350 – 2.500 (0.0925 – 0.0984)	———
	Right side	2.425 – 2.450 (0.0955 – 0.0965)	———
Crankshaft runout	———		0.05 (0.002)

OIL PUMP

ITEM	STANDARD	LIMIT
Oil pump reduction ratio	1.898 (75/43 × 37/34)	———
Oil pressure (at 60°C,140°F)	Above 300 kPa (3.0 kgf/cm², 43 psi) Below 600 kPa (6.0 kgf/cm², 85 psi) at 3 000 r/min.	———

CLUTCH

Unit: mm (in)

ITEM	STANDARD	LIMIT
Clutch cable play	10 – 15 (0.4 – 0.6)	———
Clutch release screw	1/4 turn back	———
Clutch drive plate thickness	2.92 – 3.08 (0.115 – 0.121)	2.62 (0.103)
Clutch drive plate claw width	15.9 – 16.0 (0.626 – 0.630)	15.1 (0.594)
Clutch drive plate distortion	———	0.10 (0.004)
Clutch spring free length	———	47.6 (1.87)

TRANSMISSION + DRIVE CHAIN

Unit: mm (in) Except ratio

ITEM		STANDARD	LIMIT
Primary reduction ratio		1.744 (75/43)	———
Final reduction ratio		3.133 (47/15)	———
Gear ratios	1st (low)	3.083 (37/12)	———
	2nd	2.062 (33/16)	———
	3rd	1.647 (28/17)	———
	4th	1.400 (28/20)	———
	5th	1.227 (27/22)	———
	6th (top)	1.095 (23/21)	———
Gearshift-fork to gearshift-fork-groove clearance	No.1, No.2 & No.3	0.1 – 0.3 (0.004 – 0.012)	0.50 (0.020)
Gearshift fork groove width	No.1 & No.3	4.8 – 4.9 (0.189 – 0.193)	———
	No.2	5.0 – 5.1 (0.197 – 0.201)	———
Gearshift fork thickness	No.1 & No.3	4.6 – 4.7 (0.181 – 0.185)	———
	No.2	4.8 – 4.9 (0.189 – 0.193)	———
Drive chain	Type	RK50MFOZ1	———
	Links	112 links	———
	20-pitch length	———	319.4 (12.57)
Drive chain slack		25 – 35 (0.98 – 1.38)	———
Gearshift lever height		55 (2.2)	———

CARBURETOR

ITEM	SPECIFICATION	
	E-02, 19	E-19 (U-type)
Carburetor type	KEIHIN CVR32SS	←
Bore size	32 mm	←
I.D. No.	31F0	31F1
Idle r/min.	1 200 ± 100 r/min.	←
Float height	17.0 ± 1.0 mm (0.67 ± 0.04 in)	←
Main jet (M.J.)	#92	←
Jet needle (J.N.)	N1QL	←
Needle jet (N.J.)	ϕ 3.4	←
Throttle valve (Th.V)	11°	←
Pilot jet (P.J.)	#35	←
Pilot screw (P.S.)	PRE-SET (1¾ turns back)	PRE-SET (1⅞ turns back)
Throttle cable play (pulling cable)	2.0 – 4.0 mm (0.08 – 0.16 in)	←
Starter (enricher) plunger cable play	0.5 – 1.0 mm (0.02 – 0.04 in)	←

ELECTRICAL

Unit: mm (in)

ITEM	SPECIFICATION		NOTE
Ignition timing	13° B.T.D.C. at 1 500 r/min.		
Firing order	1•2•4•3		
Spark plug	Type	NGK: CR9EK DENSO: U27ETR	
	Gap	0.6 – 0.7 (0.024 – 0.028)	
Spark performance	Over 8 (0.3) at 1 atm.		
Pickup coil resistance	Approx. 135 – 200 Ω		Tester range: (× 100 Ω)
Signal generator peak voltage	More than 1.0 V		
Ignition coil resistance	Primary	⊕ tap – ⊖ tap Approx. 2 – 4 Ω	Tester range: (× 1 Ω)
	Secondary	Spark plug cap – Spark plug cap Approx. 30 – 40 kΩ	Tester range: (× 1 kΩ)
Ignition coil primary peak voltage	More than 140 V		
Generator	Slip ring O.D.	Limit: 14.0 (0.55)	DENSO
	Brush length	Limit: 4.5 (0.18)	
Generator maximum output	More than 550 W at 5 000 r/min.		
Regulated voltage	13.6 – 14.4 V at 5 000 r/min.		
Starter relay resistance	3 – 6 Ω		

ITEM			SPECIFICATION	NOTE
Battery	Type designation		YTX9-BS	
	Capacity		12V 28.8 kC (8 Ah)/10HR	
	Standard electrolyte S.G.		1.320 at 20°C (68°F)	
Fuse size	Headlight	HI	15 A	
		LO	15 A	
	Turn signal		15 A	
	Ignition		10 A	
	Taillight		10 A	
	Main		30 A	

WATTAGE

Unit: W

ITEM		SPECIFICATION
Headlight	HI	60
	LO	55
Parking or position light		5
Brake light/Taillight		21/5 × 2
Turn signal light		21 × 4
Speedometer light		LED
Tachometer light		LED
Turn signal indicator light		LED × 2
High beam indicator light		LED
Neutral position indicator light		LED
Oil pressure indicator light		LED
License plate light		5

BRAKE + WHEEL

Unit: mm (in)

ITEM	STANDARD		LIMIT
Rear brake pedal height	50 (2.0)		———
Brake disc thickness	Front	4.5 ± 0.2 (0.177 ± 0.008)	4.0 (0.16)
	Rear	5.0 ± 0.2 (0.197 ± 0.008)	4.5 (0.18)
Brake disc runout	———		0.30 (0.012)
Master cylinder bore	Front	15.870 – 15.913 (0.6248 – 0.6264)	———
	Rear	12.700 – 12.743 (0.5000 – 0.5017)	———
Master cylinder piston diameter	Front	15.827 – 15.854 (0.6231 – 0.6242)	———
	Rear	12.657 – 12.684 (0.4983 – 0.4994)	———

ITEM	STANDARD		LIMIT
Brake caliper cylinder bore	Front	30.230 – 30.306 (1.1902 – 1.1931)	———
	Rear	38.180 – 38.256 (1.5031 – 1.5061)	———
Brake caliper piston diameter	Front	30.150 – 30.200 (1.1870 – 1.1890)	———
	Rear	38.098 – 38.148 (1.5000 – 1.5019)	———
Wheel rim runout	Axial	———	2.0 (0.08)
	Radial	———	2.0 (0.08)
Wheel axle runout	Front	———	0.25 (0.010)
	Rear	———	0.25 (0.010)
Wheel rim size	Front	J17 × MT3.50	———
	Rear	J17 × MT4.50	———

SUSPENSION

Unit: mm (in)

ITEM	STANDARD	LIMIT	NOTE
Front fork stroke	130 (5.1)	———	
Front fork spring free length	———	358 (14.1)	
Front fork oil level	114 (4.5)	———	
Rear wheel travel	126 (5.0)	———	
Swingarm pivot shaft runout	———	0.3 (0.01)	

TIRE

ITEM	STANDARD		LIMIT
Cold inflation tire pressure (Solo/Dual riding)	Front	225 kPa (2.25 kgf/cm^2, 33 psi)	———
	Rear	250 kPa (2.50 kgf/cm^2, 36 psi)	———
Tire size	Front	120/60 ZR17 (55W)	———
	Rear	160/60 ZR17 (69W)	———
Tire type	Front	BRIDGESTONE BT56F	———
	Rear	BRIDGESTONE BT56R	———
Tire tread depth (Recommended depth)	Front	———	1.6 mm (0.06 in)
	Rear	———	2.0 mm (0.08 in)

FUEL + OIL

ITEM	SPECIFICATION		NOTE
Fuel type	Gasoline used should be graded 91 octane or higher. An unleaded gasoline is recommended.		
Fuel tank capacity	Including reserve	20 L (5.3/4.4 US/Imp gal)	
	Reserve only	4.5 L (1.2/1.0 US/Imp gal)	
Engine oil type	SAE 10W/40, API SF or SG		
Engine oil capacity	Change	3 300 ml (3.5/2.9 US/Imp qt)	
	Filter change	3 500 ml (3.7/3.1 US/Imp qt)	
	Overhaul	4 600 ml (4.9/4.0 US/Imp qt)	
Front fork oil type	Fork oil #10		
Front fork oil capacity (each leg)	508 ml (17.2/17.9 US/Imp oz)		
Brake fluid type	DOT 4		

Prepared by

SUZUKI MOTOR CORPORATION

Motorcycle Service Department
December, 1999
Part No. 99500-36100-01E
Printed in Japan

SUZUKI MOTOR CORPORATION

Printed in Japan